www.dorigoutensili.it

2023

DORIGO UTENSILI

DIAMOND & HARD METAL TOOLS

PRONTI A FARE SQUADRA CON VOI
READY TO TEAM UP WITH YOU

DORIGO UTENSILI
DIAMOND & HARD METAL TOOLS

catalogo utensili in diamante policristallino

polycrystalline diamond tools catalogue

DORIGO UTENSILI

DIAMOND & HARD METAL TOOLS

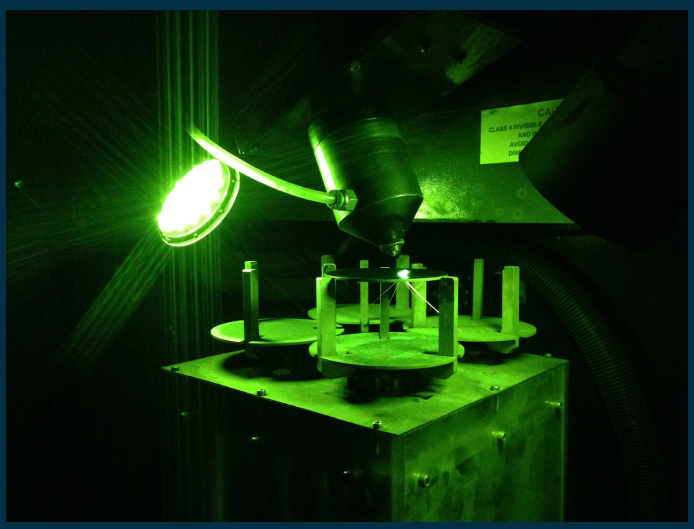

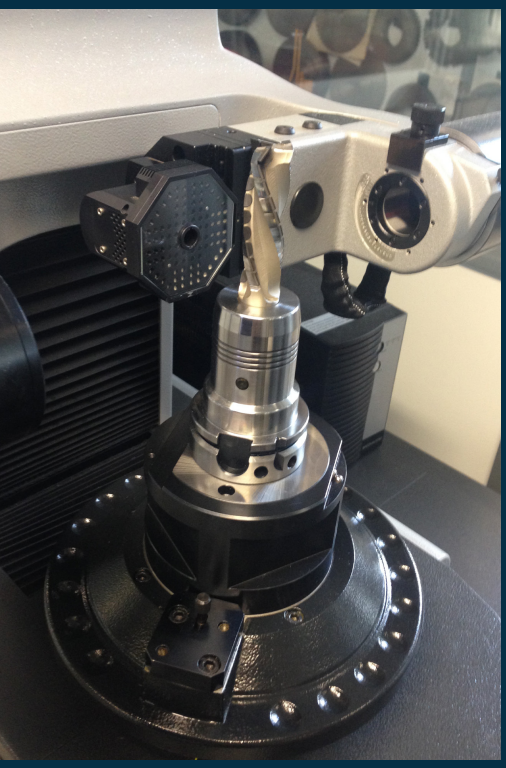

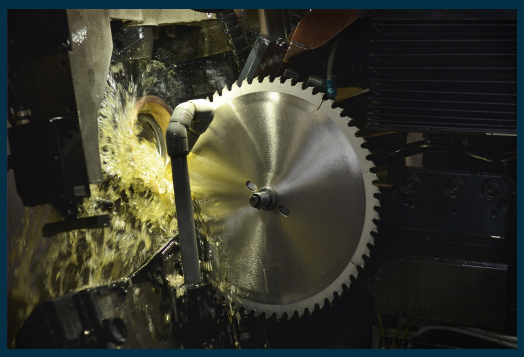

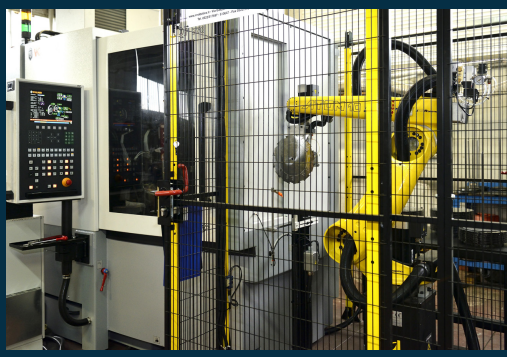

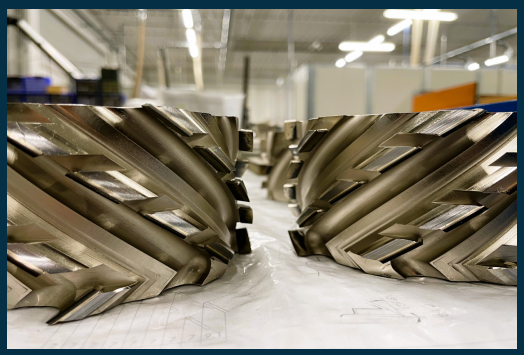

L'AZIENDA E LA SUA TECNOLOGIA

Dorigo Utensili è stata la prima azienda italiana nella produzione di utensili in diamante policristallino basata su oltre quarant'anni di esperienza nel settore della fabbricazione di utensili per la lavorazione del legno, truciolare, laminati, materie plastiche.
La natura innovativa, che ha sempre contraddistinto la società, la continua ricerca di nuove tecnologie e l'attenzione nello studio dei materiali, contribuiscono a rendere i nostri prodotti molto affidabili, garantendo prestazioni superiori per quanto riguarda le finiture e la vita degli utensili, mantenendo al tempo stesso il rapporto qualità/prezzo altamente competitivo.
Il contatto diretto con i clienti e i loro problemi svolge un ruolo fondamentale nello sviluppo e nella produzione degli utensili.
Grazie al team tecnico Dorigo Utensili può soddisfare tutte le esigenze del mercato, assicurando assistenza tecnica ai clienti nello sviluppo dei loro prodotti e delle loro tecnologie di produzione.
L'efficiente servizio di post vendita garantisce un tempestivo e completo servizio al cliente.

THE COMPANY AND ITS TECHNOLOGY

Dorigo Utensili was the first Italian company in the production of polycrystalline diamond tools based on over forty years of experience in the field of tool manufacturing for wood, particleboard, laminates, plastics.
The innovative nature which has always distinguished our company, the continuous research on new technologies and the attention to the study of materials help make our products very reliable, providing better performance with regard to the finish and tool life, keeping at the same time the quality/price ratio highly competitive.
The direct contact with our custumers and their problems plays a key role in the development and manufacturing of tools.
Thanks to its technical team, Dorigo Utensili can meet all the needs of the market, providing technical support to its customers in the development of their products and production technologies.
The efficient after-sales service guarantees a timely and comprehensive customer service.

DORIGO UTENSILI s.r.l.
Viale Europa 41 - 31010 FARRA DI SOLIGO (Treviso) - ITALY
Tel. +39 0438 980302-837427 - Fax +39 0438 82349
www.dorigoutensili.it

This is a translation of the certificate IT06/1050

The management system of

DORIGO UTENSILI S.r.l.

Viale Europa, 41 31010 Farra di Soligo (TV) Italia

has been assessed and certified as meeting the requirements of

ISO 9001:2015

For the following activities
Manufacture of tools for woodwork with hard-metal and polycristalline diamond inserts.

IAF Sector: 17

This certificate is valid from 14 November 2022 until 10 August 2024 and remains valid subject to satisfactory surveillance audits.

Issue 9. Certified since 19 October 2006

Authorised by
Paola Santarelli

SGS ITALIA S.p.A.
Via Caldera, 21 20153 MILANO - Italy
t + 39 02 73 93 1 - www.sgs.com

SGQ N° 0015 A

Membro degli Accordi di Mutuo Riconoscimento EA, IAF e ILAC
Signatory of EA, IAF and ILAC Mutual Recognition Agreements

This document is an authentic electronic certificate for Client' business purposes use only. Printed version of the electronic certificate are permitted and will be considered as a copy. This document is issued by the Company subject to SGS General Conditions of certification services available on Terms and Conditions | SGS. Attention is drawn to the limitation of liability, indemnification and jurisdictional clauses contained therein. This document is copyright protected and any unauthorized alteration, forgery or falsification of the content or appearance of this document is unlawful.

10
LAME CIRCOLARI IN DIAMANTE
DIAMOND CIRCULAR SAW BLADE

37
TRUCIOLATORI IN DIAMANTE
DIAMOND HOGGING UNITS

41
FRESE IN DIAMANTE BORDATRICI PER SQUADRATURA
CUTTING HEAD IN DIAMOND FOR SQUARING EDGEBANDING

80
PUNTE PANTOGRAFO IN DIAMANTE
DIAMOND ROUTER BITS

95
PUNTE PER FORATRICI IN DIAMANTE
DIAMOND DRILLS FOR BORING MACHINES

106
UTENSILI SPECIALI IN DIAMANTE
SPECIAL DIAMOND TOOLS

LAME IN PCD UNIVERSALI H4
UNIVERSAL CIRCULAR SAW BLADE IN DIAMOND H4

- LAME IN PCD UNIVERSALI INDICATE PER IL TAGLIO PANNELLI IN HPL, TRUCIOLARE MELAMINICO, GREZZO, LAMINATO, RIVESTIMENTO IMPIALLACCIATO.
- *UNIVERSAL CIRCULAR SAW BLADE IN PCD SUITABLE FOR CUT-TO-SIZE OF HPL, CHIPBOARD PANELS, EITHER RAW OR LAMINATED, VENEERING, MELAMINE.*

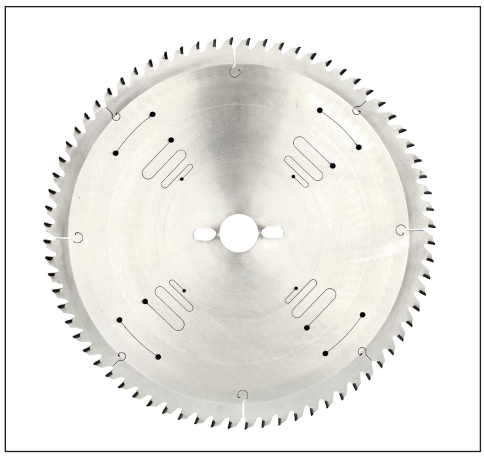

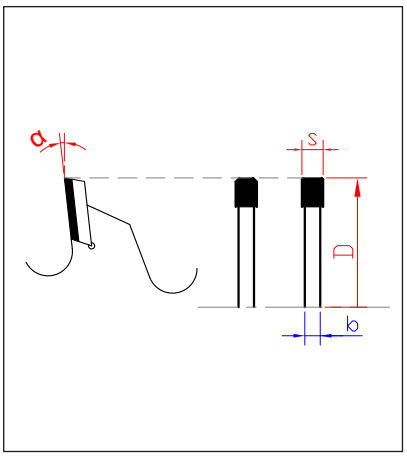

● = ready in stock ■ = delivery time 20 working day ▲ = on request

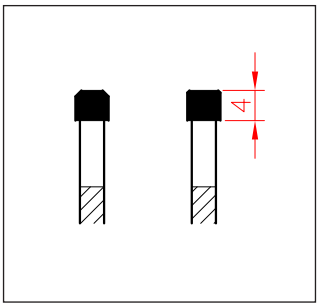

D	S	b	F.	PH	Z	H	CODE
200	3,2	2,2	30	2/9/100 + 2/2/110 + 2/14/110	36	4	■ LAD02.364N.2003230
200	3,2	2,2	30	2/9/100 + 2/2/110 + 2/14/110	48	4	■ LAD02.484N.2003230
200	3,2	2,2	30	2/9/100 + 2/2/110 + 2/14/110	54	4	■ LAD02.544N.2003230
250	3,2	2,2	30	2/9/100 + 2/2/110 + 2/14/1100	36	4	■ LAD02.364N.2503230
250	3,2	2,2	30	2/9/100 + 2/2/110 + 2/14/110	48	4	■ LAD02.484N.2503230
250	3,2	2,2	30	2/9/100 + 2/2/110 + 2/14/110	60	4	■ LAD02.604N.2503230
250	3,2	2,2	30	2/9/100 + 2/2/110 + 2/14/110	80	4	■ LAD02.804N.2503230
300	3,2	2,2	30	2/9/100 + 2/2/110 + 2/14/110	48	4	■ LAD02.484N.3003230
300	3,2	2,2	30	2/9/100 + 2/2/110 + 2/14/110	60	4	● LAD02.604N.3003230
300	3,2	2,2	30	2/9/100 + 2/2/110 + 2/14/110	72	4	● LAD02.724N.3003230
300	3,2	2,2	30	2/9/100 + 2/2/110 + 2/14/110	84	4	■ LAD02.844N.3003230
300	3,2	2,2	30	2/9/100 + 2/2/110 + 2/14/110	96	4	● LAD02.964N.3003230
350	3,5	2,5	30	2/9/100 + 2/2/110 + 2/14/110	54	4	■ LAD03.544N.3503530
350	3,5	2,5	30	2/9/100 + 2/2/110 + 2/14/110	66	4	■ LAD03.664N.3503530
350	3,5	2,5	30	2/9/100 + 2/2/110 + 2/14/110	72	4	■ LAD03.724N.3503530
350	3,5	2,5	30	2/9/100 + 2/2/110 + 2/14/110	84	4	■ LAD03.844N.3503530
350	3,5	2,5	30	2/9/100 + 2/2/110 + 2/14/110	96	4	■ LAD03.964N.3503530
400	4	2,8	30	2/9/100 + 2/2/110 + 2/14/110	48	4	■ LAD05.484N.4004030
400	4	2,8	30	2/9/100 + 2/2/110 + 2/14/110	60	4	■ LAD05.604N.4004030
400	4	2,8	30	2/9/100 + 2/2/110 + 2/14/110	72	4	■ LAD05.724N.4004030
400	4	2,8	30	2/9/100 + 2/2/110 + 2/14/110	96	4	■ LAD05.964N.4004030

LAME IN PCD UNIVERSALI H6
UNIVERSAL CIRCULAR SAW BLADE IN DIAMOND H6

- LAME IN PCD UNIVERSALI INDICATE PER IL TAGLIO PANNELLI IN HPL, TRUCIOLARE MELAMINICO, GREZZO, LAMINATO, RIVESTIMENTO IMPIALLACCIATO.
- *UNIVERSAL CIRCULAR SAW BLADE IN PCD SUITABLE FOR CUT-TO-SIZE OF CHIPBOARD PANELS, EITHER RAW OR LAMINATED, VENEERING, MELAMINE.*

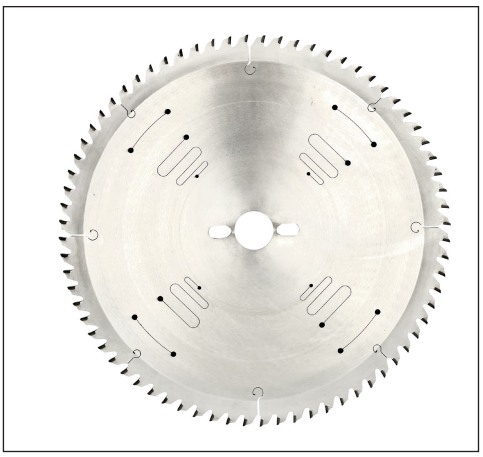

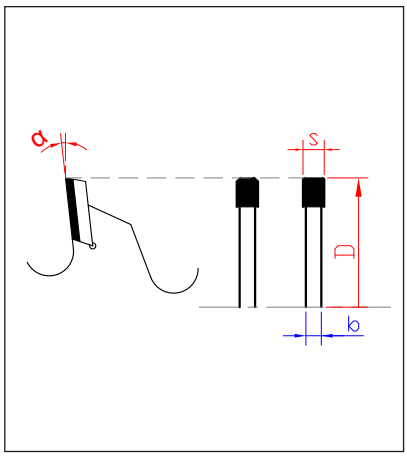

● = ready in stock ■ = delivery time 20 working day ▲ = on request

D	S	b	F.	PH	Z	H	CODE
200	3,2	2,2	30	2/9/100 + 2/2/110 + 2/14/110	36	6	■ LAD02.366N.2003230
200	3,2	2,2	3	2/9/100 + 2/2/110 + 2/14/110	48	6	■ LAD02.486N.2003230
200	3,2	2,2	3	2/9/100 + 2/2/110 + 2/14/110	54	6	■ LAD02.546N.2003230
250	3,2	2,2	30	2/9/100 + 2/2/110 + 2/14/1100	36	6	■ LAD02.366N.2503230
250	3,2	2,2	30	2/9/100 + 2/2/110 + 2/14/110	48	6	■ LAD02.486N.2503230
250	3,2	2,2	30	2/9/100 + 2/2/110 + 2/14/110	60	6	■ LAD02.606N.2503230
250	3,2	2,2	30	2/9/100 + 2/2/110 + 2/14/110	80	6	■ LAD02.806N.2503230
300	3,2	2,2	30	2/9/100 + 2/2/110 + 2/14/110	48	6	■ LAD02.486N.3003230
300	3,2	2,2	30	2/9/100 + 2/2/110 + 2/14/110	60	6	● LAD02.606N.3003230
300	3,2	2,2	30	2/9/100 + 2/2/110 + 2/14/110	72	6	● LAD02.726N.3003230
300	3,2	2,2	30	2/9/100 + 2/2/110 + 2/14/110	84	6	■ LAD02.846N.3003230
300	3,2	2,2	30	2/9/100 + 2/2/110 + 2/14/110	96	6	● LAD02.966N.3003230
350	3,5	2,5	30	2/9/100 + 2/2/110 + 2/14/110	54	6	■ LAD03.546N.3503530
350	3,5	2,5	30	2/9/100 + 2/2/110 + 2/14/110	66	6	■ LAD03.666N.3503530
350	3,5	2,5	30	2/9/100 + 2/2/110 + 2/14/110	72	6	■ LAD03.726N.3503530
350	3,5	2,5	30	2/9/100 + 2/2/110 + 2/14/110	84	6	■ LAD03.846N.3503530
350	3,5	2,5	30	2/9/100 + 2/2/110 + 2/14/110	96	6	■ LAD03.966N.3503530
400	4	2,8	30	2/9/100 + 2/2/110 + 2/14/110	48	6	■ LAD05.486N.4004030
400	4	2,8	30	2/9/100 + 2/2/110 + 2/14/110	60	6	■ LAD05.606N.4004030
400	4	2,8	30	2/9/100 + 2/2/110 + 2/14/110	72	6	■ LAD05.726N.4004030
400	4	2,8	30	2/9/100 + 2/2/110 + 2/14/110	96	6	■ LAD05.966N.4004030

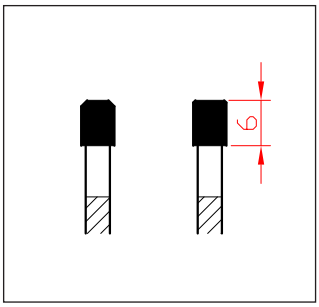

LAME SEZIONATRICI IN PCD H4
SAW BLADE IN DIAMOND FOR PANEL SIZING MACHINE H4

- LAMA IN DIAMANTE SEZIONATRICE INDICATA PER IL TAGLIO PANNELLI IN TRUCIOLARE MELAMINICO, GREZZO, LAMINATO, RIVESTIMENTO IMPIALLACCIATO.
- *CIRCULAR SAW BLADE IN PCD SUITABLE FOR CUT-TO-SIZE OF CHIPBOARD PANELS, EITHER RAW OR LAMINATED, VENEERING, MELAMINE.*

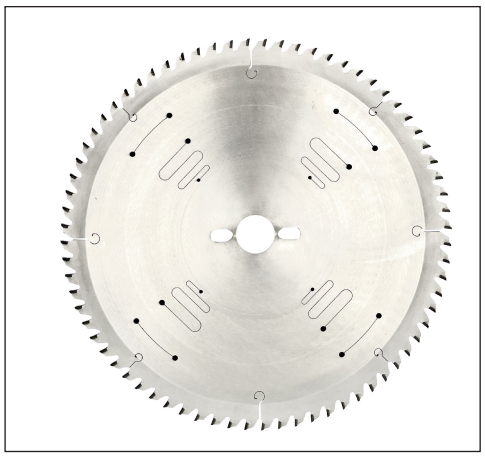

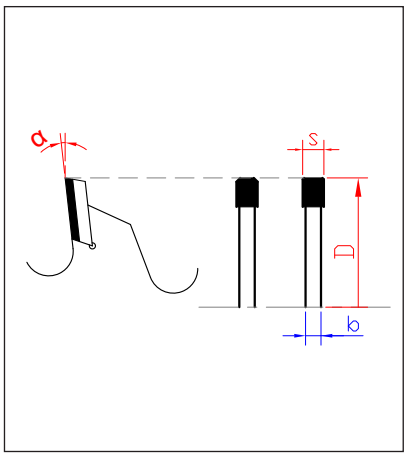

● = ready in stock ■ = delivery time 20 working day ▲ = on request

D	S	b	F.	PH	MACHINE	Z	H	CODE
300	4,4	3,2	30	2/10/60	Panhans	60	4	■ LAD07.0604N.3004430
300	4,4	3,2	30	2/10/60	Panhans	72	4	■ LAD07.0724N.3004430
300	4,4	3,2	65	2/9/110	Selco	72	4	■ LAD07.0724N.3004465
300	4,4	3,2	65	2/9/110	Selco	60	4	■ LAD07.0604N.3004460
300	4,4	3,2	75		Homag	72	4	■ LAD07.0724N.3004475
300	4,4	3,2	75		Homag	60	4	■ LAD07.0604N.3004475
300	4,4	3,2	80	2/14/110+ 4/9/110	Scm	72	4	■ LAD07.0724N.3004480
300	4,4	3,2	80	2/14/110+ 4/9/110	Scm	72	4	■ LAD07.0724N.3004480
320	4,4	3,2	65	2/9/110	Selco	72	4	■ LAD07.0724N.3204465
320	4,4	3,2	75	3/13/95	Giben	72	4	■ LAD07.0724N.3204475
350	4,4	3,2	30	2/10/60	Panhans	54	4	■ LAD07.0544N.3504430
350	4,4	3,2	60	2/14/100	Holzma	54	4	■ LAD07.0544N.3504460
350	4,4	3,2	30	2/10/60	Panhans	72	4	■ LAD07.0724N.3504430
350	4,4	3,2	50	4/13/80	Giben	72	4	■ LAD07.0724N.3504450
350	4,4	3,2	60	2/14/100	Holzma	72	4	■ LAD07.0724N.3504460
350	4,4	3,2	80	4/9/100+2/9/110+2/14/110	Gabbiani	72	4	■ LAD07.0724N.3504480
355	4,4	3,2	75		Giben	72	4	■ LAD07.0724N.3554475
355	4,4	3,2	30		Scm, Panhans	54	4	■ LAD07.0544N.3554430
355	4,4	3,2	30		Scm, Panhans	72	4	■ LAD07.0724N.3554430
355	4,4	3,2	75		Giben	54	4	■ LAD07.0544N.3554475
355	4,4	3,2	75		Giben	72	4	■ LAD07.0724N.3554475
355	4,4	3,2	80		Gabbiani	54	4	■ LAD07.0544N.3554480
355	4,4	3,2	80		Gabbiani	72	4	■ LAD07.0724N.3554480
360	4,4	3,2	65	2/9/110	Selco	60	4	■ LAD07.0604N.3604465
360	4,6	3,2	65	2/9/110	Selco	72	4	■ LAD07.0724N.3604465
370	4,4	3,2	40		Schelling	54	4	■ LAD07.0544N.3704440

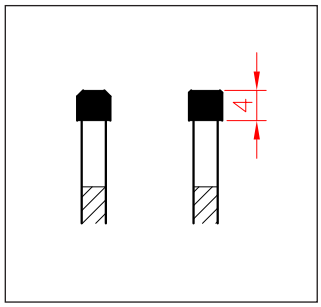

LAME SEZIONATRICI IN PCD H4
SAW BLADE IN DIAMOND FOR PANEL SIZING MACHINE H4

D	S	b	F.	PH	MACHINE	Z	H	CODE
370	4,4	3,2	30		Schelling	72	4	LAD07.0724N.3704430
380	4,8	3,5	60	2/14/110	Holzma	60	4	LAD07.0604N.3804460
380	4,8	3,5	60	2/14/100	Holzma	72	4	LAD07.0724N.3804460
400	4,4	3,2	60	2/11/85	Anthon	54	4	LAD07.0544N.4004460
400	4,4	3,2	80	4/9/100+2/14/110	Gabbiani	54	4	LAD07.0544N.4004480
400	4,4	3,2	75	4/15/105	Giben	54	4	LAD07.0544N.4004475
400	4,4	3,2	80	4/9/100 - 2/7/110 - 2/14/110	Scm	54	4	LAD07.0544N.4004480
400	4,4	3,2	30	/	Schelling	54	4	LAD07.0544N.4004430
400	4,4	3,2	60	2/11/85	Anthon	60	4	LAD07.0604N.4004460
400	4,4	3,2	80	4/9/100 - 2/14/110	Gabbiani	60	4	LAD07.0604N.4004480
400	4,4	3,2	75	4/15/105	Giben	60	4	LAD07.0604N.4004475
400	4,4	3,2	30	2/10/60	Panhans	60	4	LAD07.0604N.4004430
400	4,4	3,2	80	4/9/100 - 2/7/110 - 2/14/110	Scm	60	4	LAD07.0604N.4004480
400	4,4	3,2	80	2/9/130 - 4/19/120	Selco	60	4	LAD07.0604N.4004480
400	4,4	3,2	30	/	Schelling	60	4	LAD07.0604N.4004430
400	4,4	3,2	30	2/10/60	Panhans	72	4	LAD07.0724N.4004430
400	4,4	3,2	80	4/9/100 - 2/7/110 - 2/14/110	Scm	72	4	LAD07.0724N.4004480
400	4,4	3,2	80	2/9/130 - 4/19/120	Selco	72	4	LAD07.0724N.4004480
400	4,8	3,5	60	/	Holzma	54	4	LAD09.0544N.4004865
400	4,8	3,5	60	/	Holzma	72	4	LAD07.0724N.4004860
420	4,4	3,2	80	4/9/100 - 2/14/115	Gabbiani	60	4	LAD07.0604N.4204480
420	4,8	3,5	60	2/10/80 - 2/14/215	Holzma	60	4	LAD07.0604N.4204860
420	4,8	3,5	60	2/10/80 - 2/14/125	Holzma	84	4	LAD07.0844N.4204860
430	4,4	3,2	60	2/11/85	Anthon	48	4	LAD07.0484N.4304460
430	4,4	3,2	75	4/15/105	Giben	48	4	LAD07.0484N.4304475
430	4,4	3,2	80	2/9/130 - 4/19/120	Selco	48	4	LAD07.0484N.4304480
430	4,4	3,2	60	2/11/85	Anthon	60	4	LAD07.0604N.4304460
430	4,3	3,2	75	4/15/105	Giben	60	4	LAD07.0604N.4304375
430	4,4	3,2	80	2/9/130 - 4/19/120	Selco	60	4	LAD07.0604N.4304480
430	4,6	3,2	80	2/9/130 - 4/19/120	Selco	48	4	LAD07.0484N.4304480
430	4,6	3,2	80	2/9/130 - 4/19/120	Selco	60	4	LAD07.0604N.4304680
450	4,4	3,2	80	4/9/100 - 2/14/110	Gabbiani	48	4	LAD07.0484N.4504480
450	4,4	3,2	30	/	Schelling	48	4	LAD07.0484N.4504430
450	4,4	3,2	80	4/9/110 - 2 /14/110	Gabbiani	60	4	LAD07.0604N.4504460
450	4,4	3,2	30	/	Schelling	60	4	LAD07.0604N.4504430
450	4,8	3,5	80	2/14/125+2/17/100	Holzma	72	4	LAD09.0724N.4504880
450	4,8	3,5	80	2/9/130 - 4/19/120	Selco	48	4	LAD09.0484N.4504880
450	4,8	3,5	80	2/9/130 - 4/19/120	Selco	54	4	LAD09.0544N.4504880
450	4,8	3,5	80	2/9/130 - 4/19/120	Selco	72	4	LAD09.0724N.4504880
460	4,4	3,2	30	/	Schelling	48	4	LAD07.0484N.4604430
460	4,4	3,2	30	/	Schelling	60	4	LAD07.0604N.4604430
470	4,4	3,2	75	4/15/105	Giben	48	4	LAD07.0484N.4704475
470	4,4	3,2	75	4/15/105	Giben	60	4	LAD07.0604N.4704475
470	4,4	3,2	30	/		60	4	LAD07.0604N.4704430
480	4,4	3,2	30	/	Schelling	48	4	LAD07.0484N.4804430
480	4,8	3,5	80	2/9/130 - 4/19/120	Selco	48	4	LAD09.0484N.4804880
480	4,8	3,5	80	2/9/130 - 4/19/120	Selco	54	4	LAD09.0544N.4804880
500	4,4	3,2	80	4/9/110+2/9/110+2/14/110	Gabbiani	54	4	LAD07.0544N.5004480
500	4,4	3,2	30		Schelling	54	4	LAD07.0544N.5004430
500	4,4	3,2	30		Schelling	72	4	LAD07.0724N.5004430
500	4,8	3,5	80	4/9/100 - 2/14/110	Gabbiani	48	4	LAD09.0484N.5004880
500	4,8	3,5	60	2/11/115	Holzma	48	4	LAD09.0484N.5004860

LAME SEZIONATRICI IN PCD H4
SAW BLADE IN DIAMOND FOR PANEL SIZING MACHINE H4

D	S	b	F.	PH	MACHINE	Z	H	CODE
500	4,8	3,5	30	/	Schelling	48	4	■ LAD09.0484N.5004830
500	4,8	3,5	80	4/9/100 + 2/14/110	Gabbiani	54	4	■ LAD09.0544N.5004880
500	4,8	3,5	60	2/11/115	Holzma	54	4	■ LAD09.0544N.5004860
500	4,8	3,5	30	/	Schelling	54	4	■ LAD09.0544N.5004830
500	4,8	3,5	60	2/11/115	Holzma	54	4	■ LAD09.0544N.5004860
500	4,8	3,5	30	2/11/115	Holzma	72	4	■ LAD09.0724N.5004830
500	4,8	3,5	80	4/15/105	Giben	72	4	■ LAD09.0724N.5004880
520	4,8	3,5	60	2/11/115 - 2/19/120	Holzma	48	4	■ LAD09.0484N.5204860
520	4,8	3,5	60	2/11/115 - 2/19/120	Holzma	54	4	■ LAD09.0544N.5204860
530	4,8	3,5	30	/	Schelling	48	4	■ LAD09.0484N.5304830
530	5,8	4	60	2/11/85	Anthon	48	4	■ LAD13.0484N.5305860
530	5,8	4	60		Anthon	54	4	■ LAD13.0544N.5305860
550	4,8	3,5	40	2/13/122	Schelling	48	4	■ LAD09.0484N.5504840
550	4,8	3,5	40	2/13/122	Schelling	54	4	■ LAD09.0544N.5504840
550	5,2	3,5	100	/	Giben	48	4	■ LAD10.0484N.55052100
550	5,2	3,5	100	/	Giben	54	4	■ LAD10.0544N.55058100
565	5,2	3,5	100	/	Giben	48	4	■ LAD10.0484N.56558100
565	5,2	3,5	100	/	Giben	54	4	■ LAD10.0544N.56558100
570	5,8	4	60	2/11/115 - 2/19/120	Holzma	48	4	■ LAD13.0484N.5705860
570	5,8	4	60	2/11/115 - 2/19/120	Holzma	54	4	■ LAD13.0544N.5705860
600	5,8	4	60	2/11/115 - 2/19/120	Holzma	54	4	■ LAD13.0544N.6005860
600	5,8	4	60	2/11/115 - 2/19/120	Holzma	60	4	■ LAD13.0604N.6005860

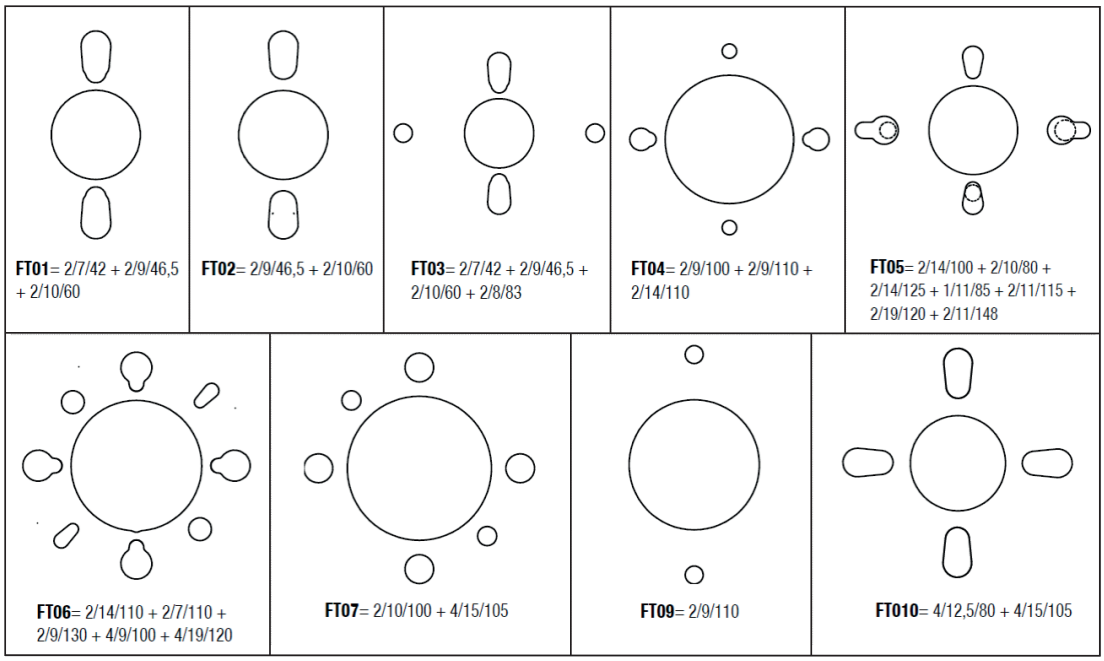

FT01= 2/7/42 + 2/9/46,5 + 2/10/60

FT02= 2/9/46,5 + 2/10/60

FT03= 2/7/42 + 2/9/46,5 + 2/10/60 + 2/8/83

FT04= 2/9/100 + 2/9/110 + 2/14/110

FT05= 2/14/100 + 2/10/80 + 2/14/125 + 1/11/85 + 2/11/115 + 2/19/120 + 2/11/148

FT06= 2/14/110 + 2/7/110 + 2/9/130 + 4/9/100 + 4/19/120

FT07= 2/10/100 + 4/15/105

FT09= 2/9/110

FT010= 4/12,5/80 + 4/15/105

DORIGO UTENSILI
DIAMOND & HARD METAL TOOLS

LAME SEZIONATRICI IN PCD H6
SAW BLADE IN DIAMOND FOR PANEL SIZING MACHINE H6

- LAMA IN DIAMANTE SEZIONATRICE INDICATA PER IL TAGLIO PANNELLI IN TRUCIOLARE MELAMINICO, GREZZO, LAMINATO, RIVESTIMENTO IMPIALLACCIATO.
- *CIRCULAR SAW BLADE IN PCD SUITABLE FOR CUT-TO-SIZE OF CHIPBOARD PANELS, EITHER RAW OR LAMINATED, VENEERING, MELAMINE.*

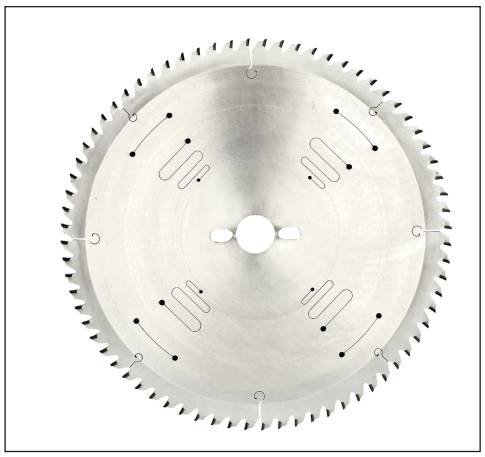

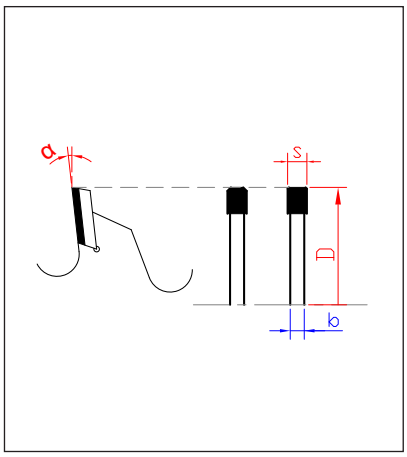

● = ready in stock ■ = delivery time 20 working day ▲ = on request

D	S	b	F.	PH	MACHINE	Z	H	CODE
300	4,4	3,2	30	2/10/60	Panhans	60	6	■ LAD07.0606N.3004430
300	4,4	3,2	30	2/10/60	Panhans	72	6	■ LAD07.0726N.3004430
300	4,4	3,2	65	2/9/110	Selco	72	6	■ LAD07.0726N.3004465
300	4,4	3,2	65	2/9/110	Selco	60	6	■ LAD07.0606N.3004460
300	4,4	3,2	75		Homag	72	6	■ LAD07.0726N.3004475
300	4,4	3,2	75		Homag	60	6	■ LAD07.0606N.3004475
300	4,4	3,2	80	2/14/110+ 4/9/110	Scm	72	6	■ LAD07.0726N.3004480
300	4,4	3,2	80	2/14/110+ 4/9/110	Scm	72	6	■ LAD07.0726N.3004480
320	4,4	3,2	65	2/9/110	Selco	72	6	■ LAD07.0726N.3204465
320	4,4	3,2	75	3/13/95	Giben	72	6	■ LAD07.0726N.3204475
350	4,4	3,2	30	2/10/60	Panhans	54	6	■ LAD07.0546N.3504430
350	4,4	3,2	60	2/14/100	Holzma	54	6	■ LAD07.0546N.3504460
350	4,4	3,2	30	2/10/60	Panhans	72	6	■ LAD07.0726N.3504430
350	4,4	3,2	50	4/13/80	Giben	72	6	■ LAD07.0726N.3504450
350	4,4	3,2	60	2/14/100	Holzma	72	6	■ LAD07.0726N.3504460
350	4,4	3,2	80	4/9/100+2/9/110+2/14/110	Gabbiani	72	6	■ LAD07.0726N.3504480
355	4,4	3,2	75		Giben	72	6	■ LAD07.0726N.3554475
355	4,4	3,2	30		Scm, Panhans	54	6	■ LAD07.0546N.3554430
355	4,4	3,2	30		Scm, Panhans	72	6	■ LAD07.0726N.3554430
355	4,4	3,2	75		Giben	54	6	■ LAD07.0546N.3554475
355	4,4	3,2	75		giben	72	6	■ LAD07.0726N.3554475
355	4,4	3,2	80		gabbiani	54	6	■ LAD07.0546N.3554480
355	4,4	3,2	80		gabbiani	72	6	■ LAD07.0726N.3554480
360	4,4	3,2	65	2/9/110	selco	60	6	■ LAD07.0606N.3604465
360	4,6	3,2	65	2/9/110	selco	72	6	■ LAD07.0726N.3604465
370	4,4	3,2	40		schelling	54	6	■ LAD07.0546N.3704440

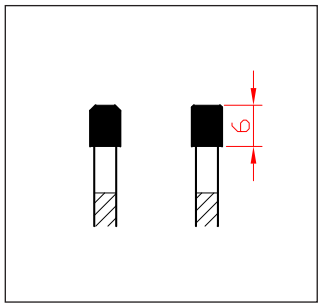

LAME SEZIONATRICI IN PCD H6
SAW BLADE IN DIAMOND FOR PANEL SIZING MACHINE H6

D	S	b	F.	PH	MACHINE	Z	H	CODE
370	4,4	3,2	30		schelling	72	6	■ LAD07.0726N.3704430
380	4,8	3,5	60	2/14/110	holzma	60	6	■ LAD07.0606N.3804460
380	4,8	3,5	60	2/14/100	holzma	72	6	■ LAD07.0726N.3804460
400	4,4	3,2	60	2/11/85	anthon	54	6	■ LAD07.0546N.4004460
400	4,4	3,2	80	4/9/100+2/14/110	gabbiani	54	6	■ LAD07.0546N.4004480
400	4,4	3,2	75	4/15/105	giben	54	6	■ LAD07.0546N.4004475
400	4,4	3,2	80	4/9/100 - 2/7/110 - 2/14/110	scm	54	6	■ LAD07.0546N.4004480
400	4,4	3,2	30	/	schelling	54	6	■ LAD07.0546N.4004430
400	4,4	3,2	60	2/11/85	anthon	60	6	■ LAD07.0606N.4004460
400	4,4	3,2	80	4/9/100 - 2/14/110	Gabbiani	60	6	■ LAD07.0606N.4004480
400	4,4	3,2	75	4/15/105	Giben	60	6	■ LAD07.0606N.4004475
400	4,4	3,2	30	2/10/60	Panhans	60	6	■ LAD07.0606N.4004430
400	4,4	3,2	80	4/9/100 - 2/7/110 - 2/14/110	Scm	60	6	■ LAD07.0606N.4004480
400	4,4	3,2	80	2/9/130 - 4/19/120	Selco	60	6	■ LAD07.0606N.4004480
400	4,4	3,2	30	/	Schelling	60	6	■ LAD07.0606N.4004430
400	4,4	3,2	30	2/10/60	Panhans	72	6	■ LAD07.0726N.4004430
400	4,4	3,2	80	4/9/100 - 2/7/110 - 2/14/110	Scm	72	6	■ LAD07.0726N.4004480
400	4,4	3,2	80	2/9/130 - 4/19/120	Selco	72	6	■ LAD07.0726N.4004480
400	4,8	3,5	60	/	Holzma	54	6	■ LAD09.0546N.4004865
400	4,8	3,5	60	/	Holzma	72	6	■ LAD07.0726N.4004860
420	4,4	3,2	80	4/9/100 - 2/14/115	Gabbiani	60	6	■ LAD07.0606N.4204480
420	4,8	3,5	60	2/10/80 - 2/14/215	Holzma	60	6	■ LAD07.0606N.4204860
420	4,8	3,5	60	2/10/80 - 2/14/125	Holzma	84	6	■ LAD07.0846N.4204860
430	4,4	3,2	60	2/11/85	Anthon	48	6	■ LAD07.0486N.4304460
430	4,4	3,2	75	4/15/105	Giben	48	6	■ LAD07.0486N.4304475
430	4,4	3,2	80	2/9/130 - 4/19/120	Selco	48	6	■ LAD07.0486N.4304480
430	4,4	3,2	60	2/11/85	Anthon	60	6	■ LAD07.0606N.4304460
430	4,3	3,2	75	4/15/105	Giben	60	6	■ LAD07.0606N.4304375
430	4,4	3,2	80	2/9/130 - 4/19/120	Selco	60	6	■ LAD07.0606N.4304480
430	4,6	3,2	80	2/9/130 - 4/19/120	Selco	48	6	■ LAD07.0486N.4304480
430	4,6	3,2	80	2/9/130 - 4/19/120	Selco	60	6	■ LAD07.0606N.4304680
450	4,4	3,2	80	4/9/100 - 2/14/110	Gabbiani	48	6	■ LAD07.0486N.4504480
450	4,4	3,2	30	/	Schelling	48	6	■ LAD07.0486N.4504430
450	4,4	3,2	80	4/9/110 - 2 /14/110	Gabbiani	60	6	■ LAD07.0606N.4504460
450	4,4	3,2	30	/	Schelling	60	6	■ LAD07.0606N.4504430
450	4,8	3,5	80	2/14/125+2/17/100	Holzma	72	6	■ LAD09.0726N.4504880
450	4,8	3,5	80	2/9/130 - 4/19/120	Selco	48	6	■ LAD09.0486N.4504880
450	4,8	3,5	80	2/9/130 - 4/19/120	Selco	54	6	■ LAD09.0546N.4504880
450	4,8	3,5	80	2/9/130 - 4/19/120	Selco	72	6	■ LAD09.0726N.4504880
460	4,4	3,2	30	/	Schelling	48	6	■ LAD07.0486N.4604430
460	4,4	3,2	30	/	Schelling	60	6	■ LAD07.0606N.4604430
470	4,4	3,2	75	4/15/105	Giben	48	6	■ LAD07.0486N.4704475
470	4,4	3,2	75	4/15/105	Giben	60	6	■ LAD07.0606N.4704475
470	4,4	3,2	30	/	Schelling	60	6	■ LAD07.0606N.4704430
480	4,4	3,2	30	/	Schelling	48	6	■ LAD07.0486N.4804430
480	4,8	3,5	80	2/9/130 - 4/19/120	Selco	48	6	■ LAD09.0486N.4804880
480	4,8	3,5	80	2/9/130 - 4/19/120	Selco	54	6	■ LAD09.0546N.4804880
500	4,4	3,2	80	4/9/110+2/9/110+2/14/110	Gabbiani	54	6	■ LAD07.0546N.5004480
500	4,4	3,2	30		Schelling	54	6	■ LAD07.0546N.5004430
500	4,4	3,2	30		Schelling	72	6	■ LAD07.0726N.5004430
500	4,8	3,5	80	4/9/100 - 2/14/110	Gabbiani	48	6	■ LAD09.0486N.5004880
500	4,8	3,5	60	2/11/115	Holzma	48	6	■ LAD09.0486N.5004860

LAME SEZIONATRICI IN PCD H6
SAW BLADE IN DIAMOND FOR PANEL SIZING MACHINE H6

D	S	b	F.	PH	MACHINE	Z	H	CODE
500	4,8	3,5	30	/	Schelling	48	6	■ LAD09.0486N.5004830
500	4,8	3,5	80	4/9/100 + 2/14/110	Gabbiani	54	6	■ LAD09.0546N.5004880
500	4,8	3,5	60	2/11/115	Holzma	54	6	■ LAD09.0546N.5004860
500	4,8	3,5	30	/	Schelling	54	6	■ LAD09.0546N.5004830
500	4,8	3,5	60	2/11/115	Holzma	54	6	■ LAD09.0546N.5004860
500	4,8	3,5	30	2/11/115	Holzma	72	6	■ LAD09.0726N.5004830
500	4,8	3,5	80	4/15/105	Giben	72	6	■ LAD09.0726N.5004880
520	4,8	3,5	60	2/11/115 - 2/19/120	Holzma	48	6	■ LAD09.0486N.5204860
520	4,8	3,5	60	2/11/115 - 2/19/120	Holzma	54	6	■ LAD09.0546N.5204860
530	4,8	3,5	30	/	Schelling	48	6	■ LAD09.0486N.5304830
530	5,8	4	60	2/11/85	Anthon	48	6	■ LAD13.0486N.5305860
530	5,8	4	60	2/11/85	Anthon	54	6	■ LAD13.0546N.5305860
550	4,8	3,5	40	2/13/122	Schelling	48	6	■ LAD09.0486N.5504840
550	4,8	3,5	40	2/13/122	Schelling	54	6	■ LAD09.0546N.5504840
550	5,2	3,5	100	/	Giben	48	6	■ LAD10.0486N.55052100
550	5,2	3,5	100	/	Giben	54	6	■ LAD10.0546N.55058100
565	5,2	3,5	100	/	Giben	48	6	■ LAD10.0486N.56558100
565	5,2	3,5	100	/	Giben	54	6	■ LAD10.0546N.56558100
570	5,8	4	60	2/11/115 - 2/19/120	Holzma	48	6	■ LAD13.0486N.5705860
570	5,8	4	60	2/11/115 - 2/19/120	Holzma	54	6	■ LAD13.0546N.5705860
600	5,8	4	60	2/11/115 - 2/19/120	Holzma	54	6	■ LAD13.0546N.6005860
600	5,8	4	60	2/11/115 - 2/19/120	Holzma	60	6	■ LAD13.0606N.6005860

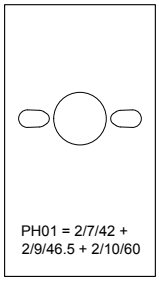
PH01 = 2/7/42 + 2/9/46.5 + 2/10/60

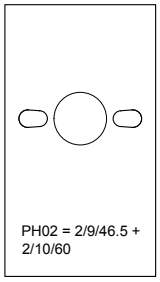
PH02 = 2/9/46.5 + 2/10/60

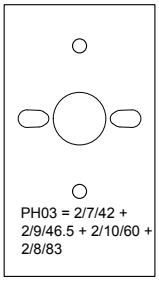
PH03 = 2/7/42 + 2/9/46.5 + 2/10/60 + 2/8/83

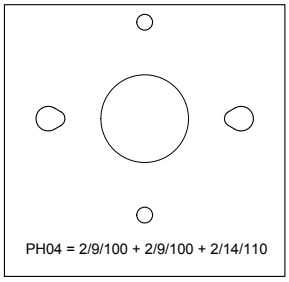
PH04 = 2/9/100 + 2/9/100 + 2/14/110

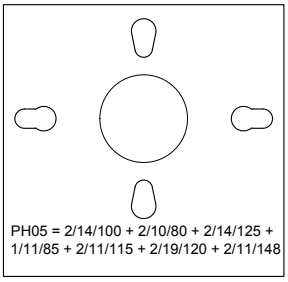
PH05 = 2/14/100 + 2/10/80 + 2/14/125 + 1/11/85 + 2/11/115 + 2/19/120 + 2/11/148

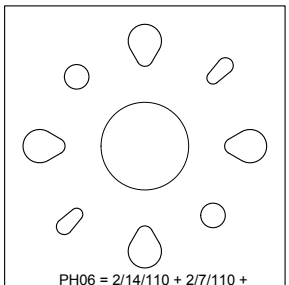
PH06 = 2/14/110 + 2/7/110 + 2/9/130 + 4/9/100 + 4/19/120

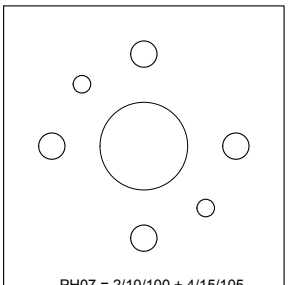
PH07 = 2/10/100 + 4/15/105

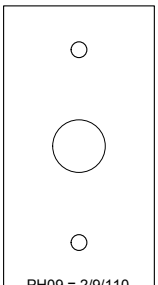
PH09 = 2/9/110

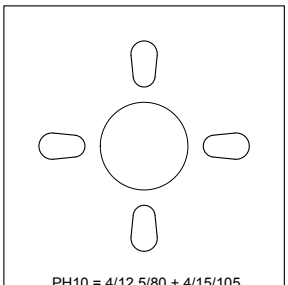
PH10 = 4/12,5/80 + 4/15/105

LAME SEZIONATRICI IN PCD PER TAGLIO ALLUMINIO E PVC H4
PCD SAW BLADES FOR CUTTING ALUMINUM AND PVC H4

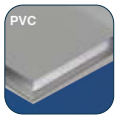

- LAMA IN DIAMANTE PER IL TAGLIO DI PROFILI IN ALLUMINIO E PVC PER IL SETTORE DEL SERRAMENTO.
- *DIAMOND BLADE FOR CUTTING ALUMINUM AND PVC PROFILES FOR THE WINDOW INDUSTRY.*

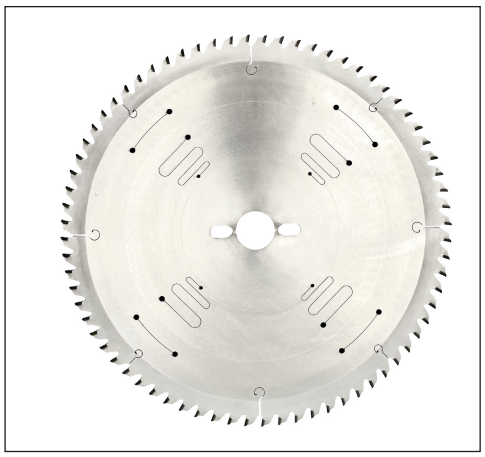

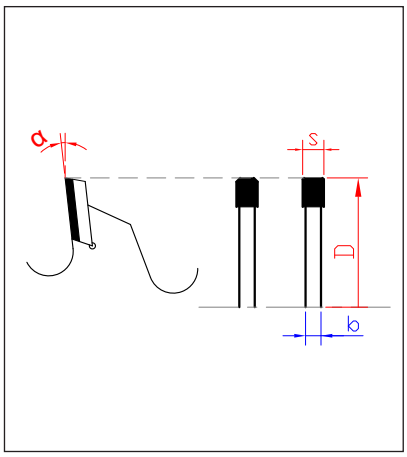

● = ready in stock ■ = delivery time 20 working day ▲ = on request

D	S	b	F.	PH	Z	H	CODE
400	4	3,2	30		84	4	■ LAD05.0844N.4004030
400	4,4	3,5	30		84	4	■ LAD07.0844N.4004430
400	4	3,2	30		96	4	■ LAD05.0964N.4004030
400	4,4	3,5	30		96	4	■ LAD07.0964N.4004430
400	4	3,2	30		108	4	■ LAD05.1084N.4004032
400	4,4	3,5	30		108	4	■ LAD07.1084N.4004430
400	4	3,2	30		120	4	■ LAD05.1204N.4004030
400	4,4	3,5	30		120	4	■ LAD07.1204N.4004430
400	4	3,2	30		132	4	■ LAD05.1324N.4004030
400	4,4	3,5	30		132	4	■ LAD07.1324N.4004430
500	4	3,2	30		96	4	■ LAD05.0964N.5004030
500	4,4	3,5	30		96	4	■ LAD07.0964N.5004430
500	4	3,2	30		108	4	■ LAD05.1084N.5004030
500	4,4	3,5	30		108	4	■ LAD07.1084N.5004430
500	4	3,2	30		120	4	■ LAD05.1204N.5004030
500	4,4	3,5	30		120	4	■ LAD07.1204N.5004430
500	4	3,2	30		132	4	■ LAD05.1324N.5004030
500	4,4	3,5	30		132	4	■ LAD07.1324N.5004430
500	4	3,2	30		144	4	■ LAD05.1444N.5004030
500	4,4	3,5	30		144	4	■ LAD07.1444N.5004430
500	4	3,2	30		160	4	■ LAD05.1604N.5004030
500	4,4	3,5	30		160	4	■ LAD07.1604N.5004430
550	4	3,2	30		120	4	■ LAD05.1204N.5504030
550	4,4	3,5	30		120	4	■ LAD07.1204N.5504430
550	4	3,2	30		132	4	■ LAD05.1324N.5504030
550	4,4	3,5	30		132	4	■ LAD07.1324N.5504430

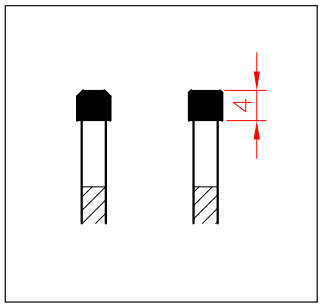

LAME SEZIONATRICI IN PCD PER TAGLIO ALLUMINIO E PVC H4
PCD SAW BLADES FOR CUTTING ALUMINUM AND PVC H4

D	S	b	F.	PH	Z	H	CODE
550	4	3,2	30		144	4	■ LAD05.1444N.5504030
550	4,4	3,5	30		144	4	■ LAD07.1444N.5504430
550	4	3,2	30		160	4	■ LAD05.1604N.5504030
550	4,4	3,5	30		160	4	■ LAD07.1604N.5504430
550	4	3,2	30		180	4	■ LAD05.1804N.5504030
550	4,4	3,5	30		180	4	■ LAD07.1804N.5504030
600	4,4	3,5	30		132	4	■ LAD05.1324N.6004430
600	4,8	4	30		132	4	■ LAD09.1324N.6004830
600	4,4	3,5	30		144	4	■ LAD05.1444N.6004430
600	4,8	4	30		144	4	■ LAD09.1444N.6004830
600	4,4	3,5	30		160	4	■ LAD05.1604N.6004430
600	4,8	4	30		160	4	■ LAD09.1604N.6004830
600	4,4	3.5	30		180	4	■ LAD05.1804N.6004430
600	4,8	4	30		180	4	■ LAD09.1804N.6004830
650	5	4	30		132	4	■ LAD10.1324N.6505030
650	5	4	30		144	4	■ LAD10.1444N.6505030
650	5	4	30		160	4	■ LAD10.1604N.6505030
650	5	4	30		180	4	■ LAD10.1804N.6505030

LAME SEZIONATRICI IN PCD PER TAGLIO ALLUMINIO E PVC H6
PCD SAW BLADES FOR CUTTING ALUMINUM AND PVC H6

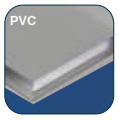

- LAMA IN DIAMANTE PER IL TAGLIO DI PROFILI IN ALLUMINIO E PVC PER IL SETTORE DEL SERRAMENTO.
- *DIAMOND BLADE FOR CUTTING ALUMINUM AND PVC PROFILES FOR THE WINDOW INDUSTRY.*

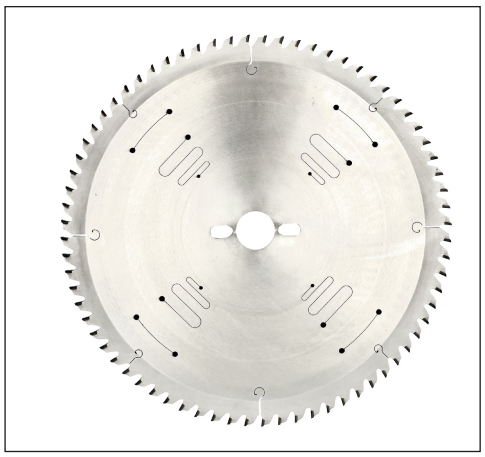

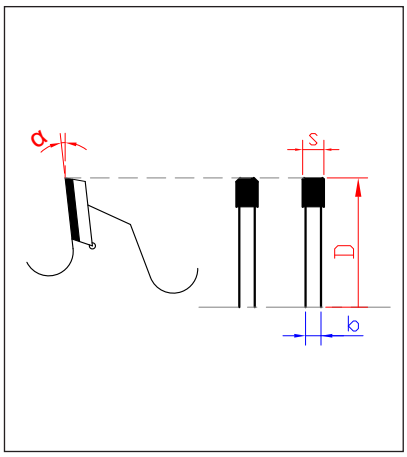

● = ready in stock ■ = delivery time 20 working day ▲ = on request

D	S	b	F.	PH	Z	H	CODE
400	4	3,2	30		84	6	■ LAD05.0846N.4004030
400	4,4	3,5	30		84	6	■ LAD07.0846N.4004430
400	4	3,2	30		96	6	■ LAD05.0966N.4004030
400	4,4	3,5	30		96	6	■ LAD07.0966N.4004430
400	4	3,2	30		108	6	■ LAD05.1086N.4004032
400	4,4	3,5	30		108	6	■ LAD07.1086N.4004430
400	4	3,2	30		120	6	■ LAD05.1206N.4004030
400	4,4	3,5	30		120	6	■ LAD07.1206N.4004430
400	4	3,2	30		132	6	■ LAD05.1326N.4004030
400	4,4	3,5	30		132	6	■ LAD07.1326N.4004430
500	4	3,2	30		96	6	■ LAD05.0966N.5004030
500	4,4	3,5	30		96	6	■ LAD07.0966N.5004430
500	4	3,2	30		108	6	■ LAD05.1086N.5004030
500	4,4	3,5	30		108	6	■ LAD07.1086N.5004430
500	4	3,2	30		120	6	■ LAD05.1206N.5004030
500	4,4	3,5	30		120	6	■ LAD07.1206N.5004430
500	4	3,2	30		132	6	■ LAD05.1326N.5004030
500	4,4	3,5	30		132	6	■ LAD07.1326N.5004430
500	4	3,2	30		144	6	■ LAD05.1446N.5004030
500	4,4	3,5	30		144	6	■ LAD07.1446N.5004430
500	4	3,2	30		160	6	■ LAD05.1606N.5004030
500	4,4	3,5	30		160	6	■ LAD07.1606N.5004430
550	4	3,2	30		120	6	■ LAD05.1206N.5504030
550	4,4	3,5	30		120	6	■ LAD07.1206N.5504430
550	4	3,2	30		132	6	■ LAD05.1326N.5504030
550	4,4	3,5	30		132	6	■ LAD07.1326N.5504430

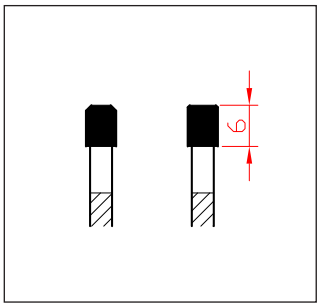

LAME SEZIONATRICI IN PCD PER TAGLIO ALLUMINIO E PVC H6
PCD SAW BLADES FOR CUTTING ALUMINUM AND PVC H6

D	S	b	F.	PH	Z	H	CODE
550	4	3,2	30		144	6	■ LAD05.1446N.5504030
550	4,4	3,5	30		144	6	■ LAD07.1446N.5504430
550	4	3,2	30		160	6	■ LAD05.1606N.5504030
550	4,4	3,5	30		160	6	■ LAD07.1606N.5504430
550	4	3,2	30		180	6	■ LAD05.1806N.5504030
550	4,4	3,5	30		180	6	■ LAD07.1806N.5504030
600	4,4	3,5	30		132	6	■ LAD05.1326N.6004430
600	4,8	4	30		132	6	■ LAD09.1326N.6004830
600	4,4	3,5	30		144	6	■ LAD05.1446N.6004430
600	4,8	4	30		144	6	■ LAD09.1446N.6004830
600	4,4	3,5	30		160	6	■ LAD05.1606N.6004430
600	4,8	4	30		160	6	■ LAD09.1606N.6004830
600	4,4	3.5	30		180	6	■ LAD05.1806N.6004430
600	4,8	4	30		180	6	■ LAD09.1806N.6004830
650	5	4	30		132	6	■ LAD10.1326N.6505030
650	5	4	30		144	6	■ LAD10.1446N.6505030
650	5	4	30		160	6	■ LAD10.1606N.6505030
650	5	4	30		180	6	■ LAD10.1806N.6505030

INCISORE CONICO IN DIAMANTE H4
CONICAL SCORING SAW BLADE PCD H4

- INCISORE CONICO INDICATO PER IL TAGLIO PANNELLI IN TRUCIOLARE MELAMINICO, GREZZO, LAMINATO, RIVESTIMENTO IMPIALLACCIATO.

- *CONICAL SCORING BLADE IN DIAMOND, SUITABLE FOR WORKING ON CHIPBOARD PANELS LAMINATED, VENEERING,MELAMINE. THE TOOTH'S WIDTH IS RETED TO THE MAIN BLADE.*

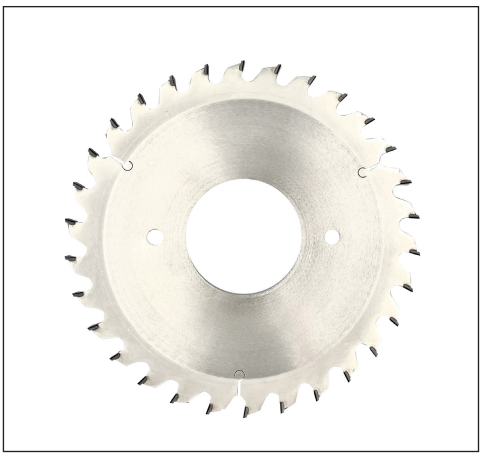

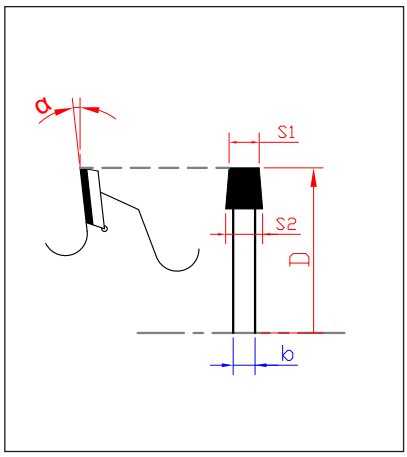

● = ready in stock ■ = delivery time 20 working day ▲ = on request

D	S1-S2	b	F.	PH	MACHINE	Z	H	CODE
80	3,1/4,3	2,2	20			12	4	■ ICD03.0124M.80314320
80	3,1/4,3	2,2	22			12	4	■ ICD03.0124M.80314322
100	3,1/4,3	2,2	20		Schelling	24	4	■ ICD03.0244M.100314320
100	3,1/4,3	2,2	22			24	4	■ ICD03.0244M.100314322
110	3,1/4,3	2,2	20			24	4	■ ICD03.0244M.110314320
110	3,1/4,3	2,2	22			24	4	■ ICD03.0244M.110314322
115	3,1/4,3	2,2	20			24	4	■ ICD03.0244M.115314320
115	3,1/4,3	2,2	22			24	4	■ ICD03.0244M.110314322
120	2,8/4,1	2,2	22			24	4	■ ICD02.0244M.120284122
120	2,8/4,1	2,2	20		Schelling	24	4	■ ICD03.0244M.120284120
120	3,1/4,3	2,2	20			24	4	■ ICD02.0244M.120284120
120	3,1/4,3	2,2	22			24	4	■ ICD03.0244M.120314322
120	3,4/4,6	2,2	20			24	4	■ ICD04.0244M.120344620
120	3,4/4,6	2,2	22			24	4	■ ICD04.0244M.120344622
125	3,1/4,3	2,2	20		Panhans	24	4	■ ICD04.0244M.12524320
125	3,1/4,3	2,2	22			24	4	■ ICD04.0244M.125314322
125	3,4/4,6	2,2	20			24	4	■ ICD04.0244M.125314620
125	3,4/4,6	2,2	20		Panhans	24	4	■ ICD04.0244M.125314620
125	3,4/4,6	2,2	45		Homag-Giben	24	4	■ ICD04.0244M.125344645
140	3,4/4,6	2,2	45			28	4	■ ICD04.0284M.140314645
140	3,4/4,6	2,2	16	1/6/33		28	4	■ ICD04.0284M.140344616
150	3,4/4,6	2,2	30		Scm	36	4	■ ICD04.0364M.150344630
150	3,4/4,6	2,2	45		Scm	36	4	■ ICD04.0364M.150344645
150	3,4/4,6	2,2	30		Scm	28	4	■ ICD04.0284M.150344630
150	3,4/4,6	2,2	45		Scm	28	4	■ ICD04.0284M.150344645
160	3,4/4,6	2,2	20			36	4	■ ICD04.0364M.160344620

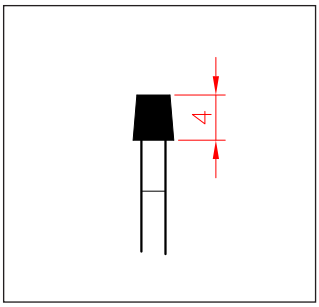

INCISORE CONICO IN DIAMANTE H4
CONICAL SCORING SAW BLADE PCD H4

D	S1-S2	b	F.	PH	MACHINE	Z	H	CODE
160	3,4/4,6	2,2	25,4			36	4	ICD04.0364M.1603446254
160	3,4/4,6	2,2	30			36	4	ICD04.0364M.160344630
160	3,4/4,6	2,2	55	3/7/66 + 3/6/84	Gabbiani	36	4	ICD04.0364M.160344655
160	3,4/4,6	2,2	60	3/7/80		36	4	ICD04.0364M.160344660
160	3,4/4,6	2,2	45	3/11/70	Giben	36	4	ICD04.0364M.160344645
160	3,4/4,6	2,2	55	3/7/66 + 3/9/72	Gabbiani	36	4	ICD04.0364M.160344655
160	3,4/4,6	2,2	60	3/7/80		36	4	ICD04.0364M.160344660
180	3,4/4,6	3,2	16	1/6/33		36	4	ICD04.0364M.180344616
180	3,4/4,6	3,2	25,4			36	4	ICD04.0364M.1803446254
180	4,3/5,5	3,2	20		Schelling-Anthon	36	4	ICD06.0364M.180435520
180	4,3/5,5	3,2	30	2/7/42+2/10/60	Panhans	36	4	ICD06.0364M.180435530
180	4,3/5,5	3,2	45		Holzma	36	4	ICD06.0364M.180435545
180	4,3/5,5	3,2	50	3/13/80	Giben	36	4	ICD06.0364M.180435550
180	4,3/5,5	3,2	20		Schelling-Anthon	36	4	ICD06.0364M.180435520
180	4,3/5,5	3,2	55	3/7/66	Gabbiani	36	4	ICD06.0364M.180435555
180	4,3/5,5	3,2	20		Holzma	36	4	ICD06.0364M.180435520
180	4,3/5,5	3,2	20		Anthon	36	4	ICD06.0364M.180435520
200	4,3/5,5	3,2	20		Schelling	36	4	ICD06.0364M.200435520
200	4,3/5,5	3,2	20		Schelling	36	4	ICD06.0364M.200435520
200	4,3/5,5	3,2	20			36	4	ICD06.0364M.200435520
200	4,3/5,5	3,2	22			36	4	ICD06.0364M.200435522
200	4,3/5,5	3,2	30	2/9/60		36	4	ICD06.0364M.200435530
200	4,3/5,5	3,2	45		Holzma	36	4	ICD06.0364M.200435545
200	4,3/5,5	3,2	50	3/13/80	Giben	36	4	ICD06.0364M.200435550
200	4,3/5,5	3,2	65	2/9/100+2/9/110	Selco	36	4	ICD06.0364M.200435565
200	4,3/5,5	3,2	65	2/9/100+2/9/110	Selco	36	4	ICD06.0364M.200435565
200	4,3/5,5	3,2	65	2/8,5/110	Selco	36	4	ICD06.0364M.200435565
200	4,3/5,5	3,2	80	2/14/110	Gabbiani	36	4	ICD06.0364M.200435580
215	4,3/5,5	3,2	50	2/7/80	Giben	36	4	ICD06.0364M.215435550
215	4,3/5,5	3,2	50	3/15/80	Giben	36	4	ICD06.0364M.215435550
220	4,3/5,5	3,2	20		Schelling	36	4	ICD06.0364M.220435520
300	4,3/5,5	3,2	50	3/15/80	Giben	48	4	ICD06.0364M.300435550
300	4,3/5,5	3,2	65	2/9/110	Selco	72	4	ICD06.0364M.300435565
300	4,3/5,5	3,2	80	2/14/110		72	4	ICD06.0364M.300435580
300	4,7/5,7	3,2	65	2/9/110	Selco	60	4	ICD07.0364M.300435565
320	4,3/5,5	3,2	50	3/15/80		48	4	ICD06.0364M.320435550
320	4,3/5,5	3,2	50	3/15/80		48	4	ICD06.0364M.320435550
340	4,7/5,9	3,5	45	3/14/65	Holzma	72	4	ICD08.0364M.340475945

INCISORE CONICO IN DIAMANTE H4
CONICAL SCORING SAW BLADE PCD H4

- INCISORE CONICO INDICATO PER IL TAGLIO PANNELLI IN TRUCIOLARE MELAMINICO, GREZZO, LAMINATO, RIVESTIMENTO IMPIALLACCIATO.

- *CONICAL SCORING BLADE IN DIAMOND, SUITABLE FOR WORKING ON CHIPBOARD PANELS LAMINATED, VENEERING,MELAMINE. THE TOOTH'S WIDTH IS RETED TO THE MAIN BLADE.*

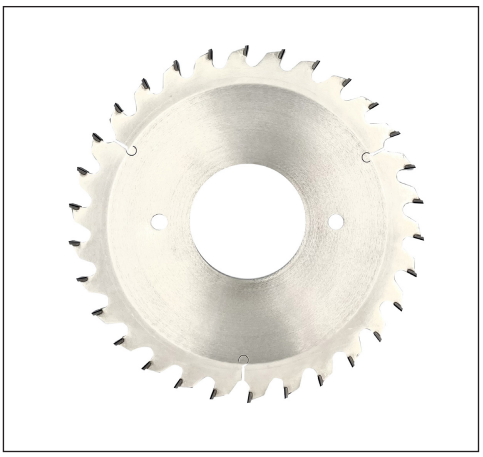

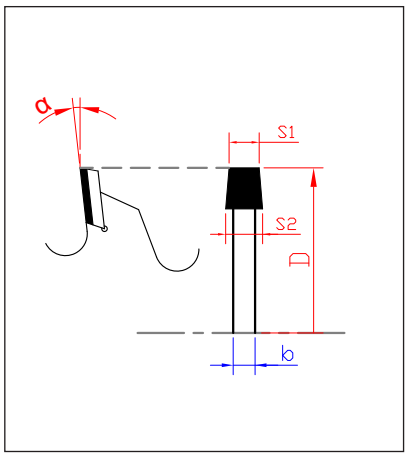

● = ready in stock ■ = delivery time 20 working day ▲ = on request

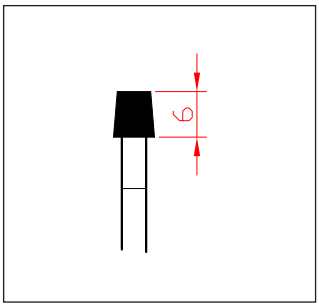

D	S1-S2	b	F.	PH	MACHINE	Z	H	CODE
80	3,1/4,3	2,2	20			12	6	■ ICD03.0126M.80314320
80	3,1/4,3	2,2	22			12	6	■ ICD03.0126M.80314322
100	3,1/4,3	2,2	20		Schelling	24	6	■ ICD03.0246M.100314320
100	3,1/4,3	2,2	22			24	6	■ ICD03.0246M.100314322
110	3,1/4,3	2,2	20			24	6	■ ICD03.0246M.110314320
110	3,1/4,3	2,2	22			24	6	■ ICD03.0246M.110314322
115	3,1/4,3	2,2	20			24	6	■ ICD03.0246M.115314320
115	3,1/4,3	2,2	22			24	6	■ ICD03.0246M.110314322
120	2,8/4,1	2,2	22			24	6	■ ICD02.0246M.120284122
120	2,8/4,1	2,2	20		Schelling	24	6	■ ICD03.0246M.120284120
120	3,1/4,3	2,2	20			24	6	■ ICD02.0246M.120284120
120	3,1/4,3	2,2	22			24	6	■ ICD03.0246M.120314322
120	3,4/4,6	2,2	20			24	6	■ ICD04.0246M.120344620
120	3,4/4,6	2,2	22			24	6	■ ICD04.0246M.120344622
125	3,1/4,3	2,2	20		Panhans	24	6	■ ICD04.0246M.12524320
125	3,1/4,3	2,2	22			24	6	■ ICD04.0246M.125314322
125	3,4/4,6	2,2	20			24	6	■ ICD04.0246M.125314620
125	3,4/4,6	2,2	20		Panhans	24	6	■ ICD04.0246M.125314620
125	3,4/4,6	2,2	45		Homag-Giben	24	6	■ ICD04.0246M.125344645
140	3,4/4,6	2,2	45			28	6	■ ICD04.0286M.140314645
140	3,4/4,6	2,2	16	1/6/33		28	6	■ ICD04.0286M.140344616
150	3,4/4,6	2,2	30		Scm	36	6	■ ICD04.0366M.150344630
150	3,4/4,6	2,2	45		Scm	36	6	■ ICD04.0366M.150344645
150	3,4/4,6	2,2	30		Scm	28	6	■ ICD04.0286M.150344630
150	3,4/4,6	2,2	45		Scm	28	6	■ ICD04.0286M.150344645
160	3,4/4,6	2,2	20			36	6	■ ICD04.0366M.160344620

INCISORE CONICO IN DIAMANTE H4
CONICAL SCORING SAW BLADE PCD H4

D	S1-S2	b	F.	PH	MACHINE	Z	H	CODE
160	3,4/4,6	2,2	25,4			36	6	ICD04.0366M.1603446254
160	3,4/4,6	2,2	30			36	6	ICD04.0366M.160344630
160	3,4/4,6	2,2	55	3/7/66 + 3/6/84	Gabbiani	36	6	ICD04.0366M.160344655
160	3,4/4,6	2,2	60	3/7/80		36	6	ICD04.0366M.160344660
160	3,4/4,6	2,2	45	3/11/70	Giben	36	6	ICD04.0366M.160344645
160	3,4/4,6	2,2	55	3/7/66 + 3/9/72	Gabbiani	36	6	ICD04.0366M.160344655
160	3,4/4,6	2,2	60	3/7/80		36	6	ICD04.0366M.160344660
180	3,4/4,6	3,2	16	1/6/33		36	6	ICD04.0366M.180344616
180	3,4/4,6	3,2	25,4			36	6	ICD04.0366M.1803446254
180	4,3/5,5	3,2	20		Schelling-Anthon	36	6	ICD06.0366M.180435520
180	4,3/5,5	3,2	30	2/7/42+2/10/60	Panhans	36	6	ICD06.0366M.180435530
180	4,3/5,5	3,2	45		Holzma	36	6	ICD06.0366M.180435545
180	4,3/5,5	3,2	50	3/13/80	Giben	36	6	ICD06.0366M.180435550
180	4,3/5,5	3,2	20		Schelling-Anthon	36	6	ICD06.0366M.180435520
180	4,3/5,5	3,2	55	3/7/66	Gabbiani	36	6	ICD06.0366M.180435555
180	4,3/5,5	3,2	20		Holzma	36	6	ICD06.0366M.180435520
180	4,3/5,5	3,2	20		Anthon	36	6	ICD06.0366M.180435520
200	4,3/5,5	3,2	20		Schelling	36	6	ICD06.0366M.200435520
200	4,3/5,5	3,2	20		Schelling	36	6	ICD06.0366M.200435520
200	4,3/5,5	3,2	20			36	6	ICD06.0366M.200435520
200	4,3/5,5	3,2	22			36	6	ICD06.0366M.200435522
200	4,3/5,5	3,2	30	2/9/60		36	6	ICD06.0366M.200435530
200	4,3/5,5	3,2	45		Holzma	36	6	ICD06.0366M.200435545
200	4,3/5,5	3,2	50	3/13/80	Giben	36	6	ICD06.0366M.200435550
200	4,3/5,5	3,2	65	2/9/100+2/9/110	Selco	36	6	ICD06.0366M.200435565
200	4,3/5,5	3,2	65	2/9/100+2/9/110	Selco	36	6	ICD06.0366M.200435565
200	4,3/5,5	3,2	65	2/8,5/110	Selco	36	6	ICD06.0366M.200435565
200	4,3/5,5	3,2	80	2/14/110	Gabbiani	36	6	ICD06.0366M.200435580
215	4,3/5,5	3,2	50	2/7/80	Giben	36	6	ICD06.0366M.215435550
215	4,3/5,5	3,2	50	3/15/80	Giben	36	6	ICD06.0366M.215435550
220	4,3/5,5	3,2	20		Schelling	36	6	ICD06.0366M.220435520
300	4,3/5,5	3,2	50	3/15/80	Giben	48	6	ICD06.0366M.300435550
300	4,3/5,5	3,2	65	2/9/110	Selco	72	6	ICD06.0366M.300435565
300	4,3/5,5	3,2	80	2/14/110		72	6	ICD06.0366M.300435580
300	4,7/5,7	3,2	65	2/9/110	Selco	60	6	ICD07.0366M.300435565
320	4,3/5,5	3,2	50	3/15/80		48	6	ICD06.0366M.320435550
320	4,3/5,5	3,2	50	3/15/80		48	6	ICD06.0366M.320435550
340	4,7/5,9	3,5	45	3/14/65	Holzma	72	6	ICD08.0366M.340475945

INCISORE IN DIA REGISTRABILE H6
ADJUSTABLE SCORING SAW BLADE H6

- INCISORE IN PCD REGISTRABILE COMPLETO DI ANELLI DISTANZIALI.
- *ADJUSTABLE SCORING SAW BLADE IN PCD COMPLETE WITH SPACERS RINGS.*

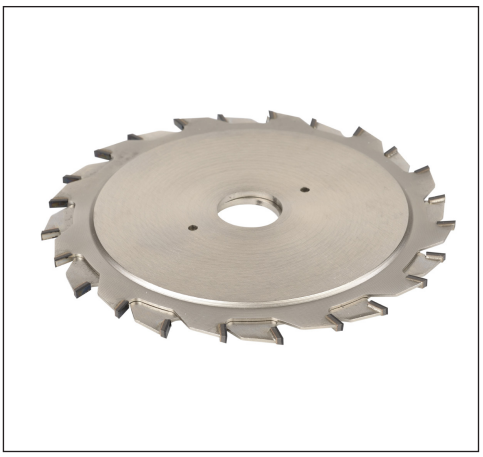

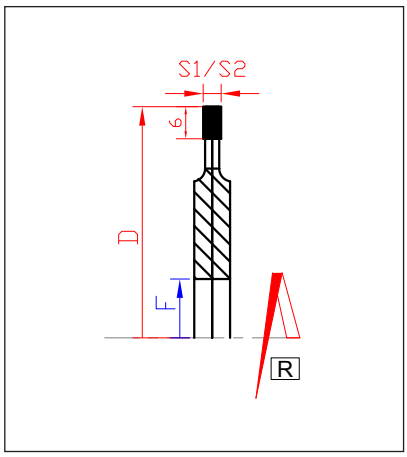

● = ready in stock ■ = delivery time 20 working day ▲ = on request

D	S1/S2	b	F.	Z	H	CODE
70	2,8/3,6	2,2	20	10+10	6	■ IRD.01.0246A.A010
80	2,8/3,6	2,2	20	10+10	6	■ IRD.01.0246A.A010
80	2,8/3,6	2,2	20	12+12	6	■ IRD.01.0246A.A012
100	2,8/3,6	2,2	20	10+10	6	■ IRD.01.0246A.A010
100	2,8/3,6	2,2	20	12+12	6	■ IRD.01.0246A.A012
100	2,8/3,6	2,2	22	10+10	6	■ IRD.01.0246A.A010
100	2,8/3,6	2,2	22	12+12	6	■ IRD.01.0246A.A012
120	2,8/3,6	2,2	20	12+12	6	● IRD.01.0246A.A012
120	2,8/3,6	2,2	22	12+12	6	● IRD.01.0246A.A012
125	2,8/3,6	2,2	20	12+12	6	● IRD.01.0246A.A012
125	2,8/3,6	2,2	22	12+12	6	● IRD.01.0246A.A012
125	4,0/5,0	2,2	45	18+18	6	■ IRD.01.0246A.A012

LAME IN DIAMANTE PER CANALI H4
SAW BLADE IN DIAMOND FOR GROOVING H4

- FRESA PER ESEGUIRE CANALI, INDICATA PER ESEGUIRE SCANALATURE SU MATERIALI COME TRUCIOLARI GREZZI O NOBILITATI, IMPIALLACCIATURE, MELAMINE E LAMINATI.

- *GROOVING CUTTERS IN PCD SUITABLE FOR CUT OF CHIPBOARD PANELS, EITHER RAW OR LAMINATED, VENEERING, MELAMINE.*

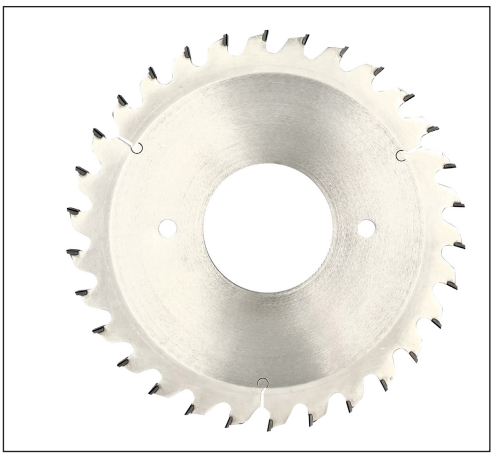

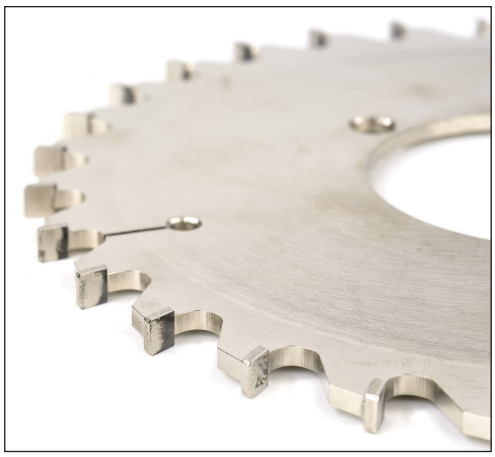

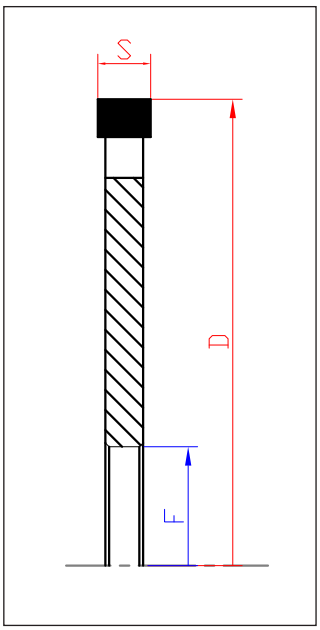

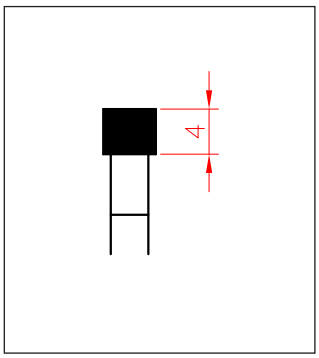

● = ready in stock ■ = delivery time 20 working day ▲ = on request

D	S	F.	Z	H	CODE
120	2	30	8	4	■ LAD01.0064
120	2,5	30	8	4	■ LAD01.0084
120	3	30	8	4	■ LAD01.0124
120	3,5	30	8	4	■ LAD01.0164
120	4	30	8	4	■ LAD01.0204
120	4,5	30	8	4	■ LAD01.0064
120	5	30	8	4	■ LAD01.0084
120	6	30	8	4	■ LAD01.0124
120	7	30	8	4	■ LAD01.0164
120	8	30	8	4	■ LAD01.0204
120	9	30	8	4	■ LAD01.0064
120	10	30	8	4	■ LAD01.0084
125	2	30	12	4	■ LAD01.0064
125	2,5	30	12	4	■ LAD01.0084
125	3	30	12	4	■ LAD01.0124
125	3,5	30	12	4	■ LAD01.0164
125	4	30	12	4	■ LAD01.0204
125	4,5	30	12	4	■ LAD01.0064
125	5	30	12	4	■ LAD01.0084
125	6	30	12	4	■ LAD01.0124
125	7	30	12	4	■ LAD01.0164
125	8	30	12	4	■ LAD01.0204
125	9	30	12	4	■ LAD01.0064
125	10	30	12	4	■ LAD01.0084
150	2	30	18	4	■ LAD01.0064
150	2,5	30	18	4	■ LAD01.0084

LAME IN DIAMANTE PER CANALI H4
SAW BLADE IN DIAMOND FOR GROOVING H4

D	S	F.	Z	H	CODE
150	3	30	18	4	■ LAD01.0124
150	3,5	30	18	4	■ LAD01.0164
150	4	30	18	4	■ LAD01.0204
150	4,5	30	18	4	■ LAD01.0064
150	5	30	18	4	■ LAD01.0084
150	6	30	18	4	■ LAD01.0124
150	7	30	18	4	■ LAD01.0164
150	8	30	18	4	■ LAD01.0204
150	9	30	18	4	■ LAD01.0064
150	10	30	18	4	■ LAD01.0084
180	3	30	24	4	■ LAD01.0124
180	3,5	30	24	4	■ LAD01.0164
180	4	30	24	4	■ LAD01.0204
180	4,5	30	24	4	■ LAD01.0064
180	5	30	24	4	■ LAD01.0084
180	6	30	24	4	■ LAD01.0124
180	7	30	24	4	■ LAD01.0164
180	8	30	24	4	■ LAD01.0204
180	9	30	24	4	■ LAD01.0064
180	10	30	24	4	■ LAD01.0084
200	3	30	24	4	■ LAD01.0124
200	3,5	30	24	4	■ LAD01.0164
200	4	30	24	4	■ LAD01.0204
200	4,5	30	24	4	■ LAD01.0064
200	5	30	24	4	■ LAD01.0084
200	6	30	24	4	■ LAD01.0124
200	7	30	24	4	■ LAD01.0164
220	3	30	32	4	■ LAD01.0124
220	3,5	30	32	4	■ LAD01.0164
220	4	30	32	4	■ LAD01.0204
220	4,5	30	32	4	■ LAD01.0064
220	5	30	32	4	■ LAD01.0084
220	6	30	32	4	■ LAD01.0124
220	7	30	32	4	■ LAD01.0164

LAME IN DIAMANTE PER CANALI H6
SAW BLADE IN DIAMOND FOR GROOVING H6

- FRESA PER ESEGUIRE CANALI, INDICATA PER ESEGUIRE SCANALATURE SU MATERIALI COME TRUCIOLARI GREZZI O NOBILITATI, IMPIALLACCIATURE, MELAMINE E LAMINATI.

- *GROOVING CUTTERS IN PCD SUITABLE FOR CUT OF CHIPBOARD PANELS, EITHER RAW OR LAMINATED, VENEERING, MELAMINE.*

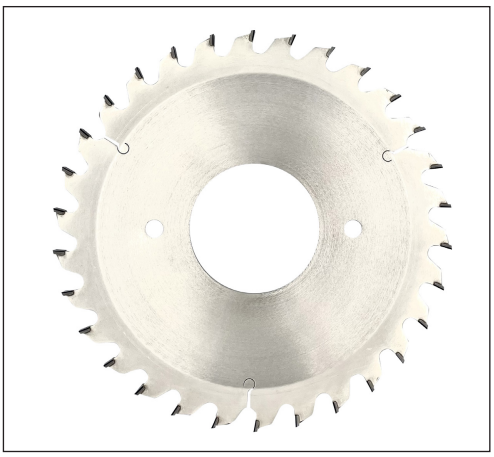

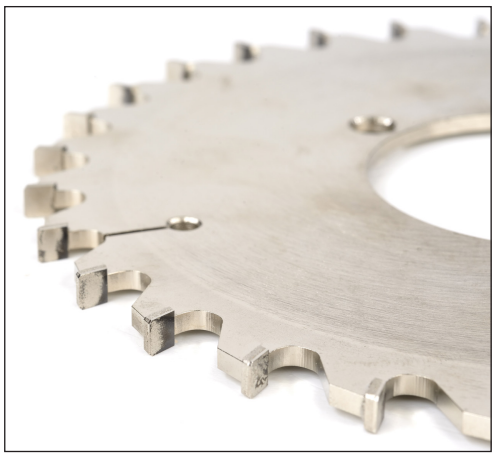

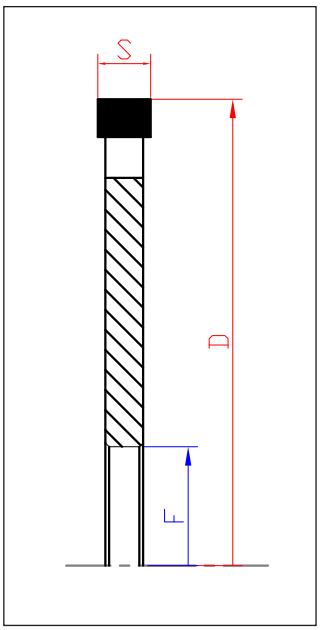

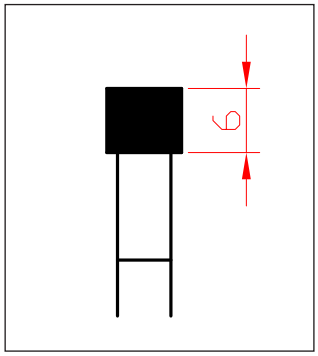

● = ready in stock ■ = delivery time 20 working day ▲ = on request

D	S	F.	Z	H	CODE
120	2	30	8	6	■ LAD01.0064
120	2,5	30	8	6	■ LAD01.0084
120	3	30	8	6	■ LAD01.0124
120	3,5	30	8	6	■ LAD01.0164
120	4	30	8	6	■ LAD01.0204
120	4,5	30	8	6	■ LAD01.0064
120	5	30	8	6	■ LAD01.0084
120	6	30	8	6	■ LAD01.0124
120	7	30	8	6	■ LAD01.0164
120	8	30	8	6	■ LAD01.0204
120	9	30	8	6	■ LAD01.0064
120	10	30	8	6	■ LAD01.0084
125	2	30	12	6	■ LAD01.0064
125	2,5	30	12	6	■ LAD01.0084
125	3	30	12	6	■ LAD01.0124
125	3,5	30	12	6	■ LAD01.0164
125	4	30	12	6	■ LAD01.0204
125	4,5	30	12	6	■ LAD01.0064
125	5	30	12	6	■ LAD01.0084
125	6	30	12	6	■ LAD01.0124
125	7	30	12	6	■ LAD01.0164
125	8	30	12	6	■ LAD01.0204
125	9	30	12	6	■ LAD01.0064
125	10	30	12	6	■ LAD01.0084
150	2	30	18	6	■ LAD01.0064
150	2,5	30	18	6	■ LAD01.0084

LAME IN DIAMANTE PER CANALI H6
SAW BLADE IN DIAMOND FOR GROOVING H6

D	S	F.	Z	H	CODE
150	3	30	18	6	■ LAD01.0124
150	3,5	30	18	6	■ LAD01.0164
150	4	30	18	6	■ LAD01.0204
150	4,5	30	18	6	■ LAD01.0064
150	5	30	18	6	■ LAD01.0084
150	6	30	18	6	■ LAD01.0124
150	7	30	18	6	■ LAD01.0164
150	8	30	18	6	■ LAD01.0204
150	9	30	18	6	■ LAD01.0064
150	10	30	18	6	■ LAD01.0084
180	3	30	24	6	■ LAD01.0124
180	3,5	30	24	6	■ LAD01.0164
180	4	30	24	6	■ LAD01.0204
180	4,5	30	24	6	■ LAD01.0064
180	5	30	24	6	■ LAD01.0084
180	6	30	24	6	■ LAD01.0124
180	7	30	24	6	■ LAD01.0164
180	8	30	24	6	■ LAD01.0204
180	9	30	24	6	■ LAD01.0064
180	10	30	24	6	■ LAD01.0084
200	3	30	24	6	■ LAD01.0124
200	3,5	30	24	6	■ LAD01.0164
200	4	30	24	6	■ LAD01.0204
200	4,5	30	24	6	■ LAD01.0064
200	5	30	24	6	■ LAD01.0084
200	6	30	24	6	■ LAD01.0124
200	7	30	24	6	■ LAD01.0164
220	3	30	32	6	■ LAD01.0124
220	3,5	30	32	6	■ LAD01.0164
220	4	30	32	6	■ LAD01.0204
220	4,5	30	32	6	■ LAD01.0064
220	5	30	32	6	■ LAD01.0084
220	6	30	32	6	■ LAD01.0124
220	7	30	32	6	■ LAD01.0164

LAMA DIA PER CANALI REGISTRABILE H4
GROOVING CUTTERS ADJUSTABLE H4

- FRESA PER ESEGUIRE CANALI REGISTRABILE, INDICATA PER ESEGUIRE SCANALATURE SU MATERIALI COME TRUCIOLARI GREZZI O NOBILITATI, IMPIALLACCIATURE, MELAMINE E LAMINATI.
- *GROOVING CUTTERS IN PCD ADJUSTABLE SUITABLE FOR CUT OF CHIPBOARD PANELS, EITHER RAW OR LAMINATED, VENEERING, MELAMINE.*

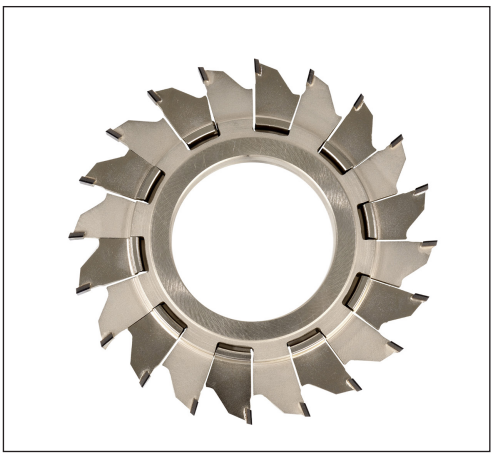

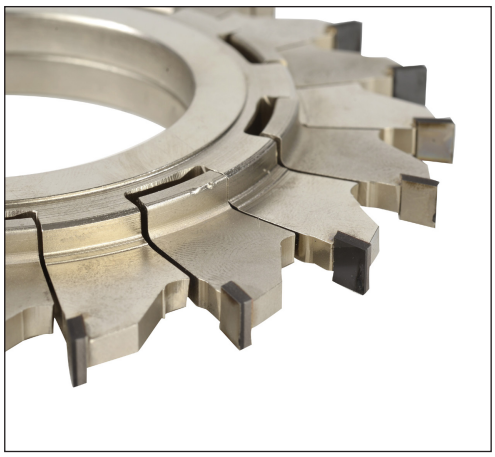

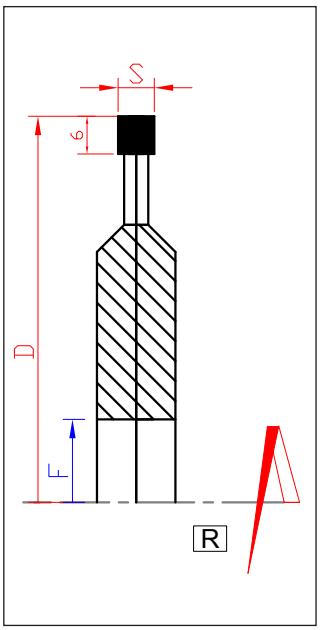

● = ready in stock ■ = delivery time 20 working day ▲ = on request

D	S	b	F.	Z	H	CODE
120-200	3/5,5		*	6+6	4	■ LAD01.01241
120-200	4/7,5		*	6+6	4	■ LAD01.01242
120-200	5/9,5		*	6+6	4	■ LAD01.01243
120-200	6/11,5		*	6+6	4	■ LAD01.01244
120-200	3/5,5		*	8+8	4	■ LAD01.01245
120-200	4/7,5		*	8+8	4	■ LAD01.01246
120-200	5/9,5		*	8+8	4	■ LAD01.01247
120-200	6/11,5		*	8+8	4	■ LAD01.01248
120-200	3/5,5		*	12+12	4	■ LAD01.01249
120-200	4/7,5		*	12+12	4	■ LAD01.012410
120-200	5/9,5		*	12+12	4	■ LAD01.012411
120-200	6/11,5		*	12+12	4	■ LAD01.012412

LAMA DIA PER CANALI REGISTRABILE H6
GROOVING CUTTERS ADJUSTABLE H6

- FRESA PER ESEGUIRE CANALI REGISTRABILE, INDICATA PER ESEGUIRE SCANALATURE SU MATERIALI COME TRUCIOLARI GREZZI O NOBILITATI, IMPIALLACCIATURE, MELAMINE E LAMINATI.
- *GROOVING CUTTERS IN PCD ADJUSTABLE SUITABLE FOR CUT OF CHIPBOARD PANELS, EITHER RAW OR LAMINATED, VENEERING, MELAMINE.*

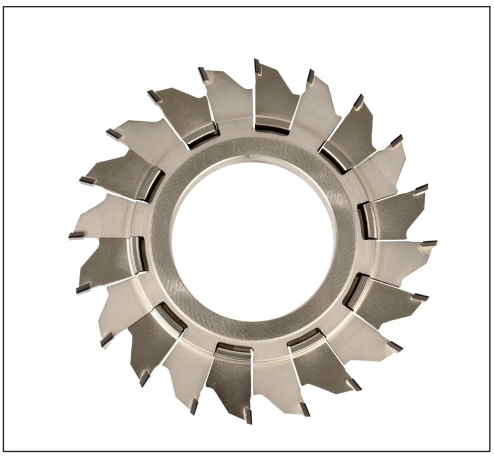

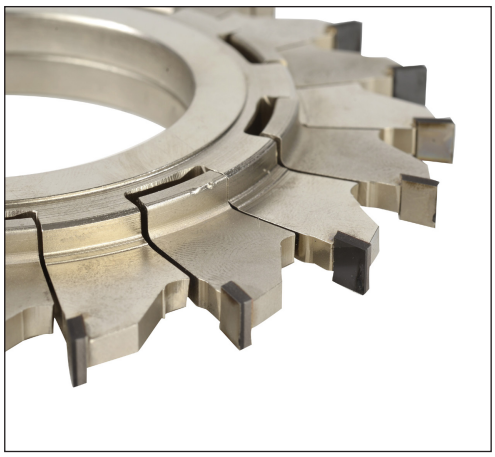

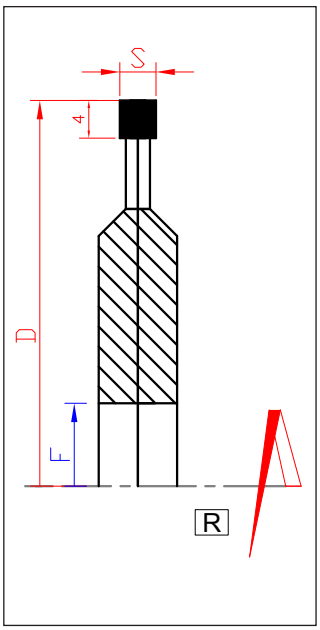

● = ready in stock ■ = delivery time 20 working day ▲ = on request

D	S	b	F.	Z	H	CODE
120-200	3/5,5		*	6+6	6	■ LAD01.01261
120-200	4/7,5		*	6+6	6	■ LAD01.01262
120-200	5/9,5		*	6+6	6	■ LAD01.01263
120-200	6/11,5		*	6+6	6	■ LAD01.01264
120-200	3/5,5		*	8+8	6	■ LAD01.01265
120-200	4/7,5		*	8+8	6	■ LAD01.01266
120-200	5/9,5		*	8+8	6	■ LAD01.01267
120-200	6/11,5		*	8+8	6	■ LAD01.01268
120-200	3/5,5		*	12+12	6	■ LAD01.01269
120-200	4/7,5		*	12+12	6	■ LAD01.012610
120-200	5/9,5		*	12+12	6	■ LAD01.012611
120-200	6/11,5		*	12+12	6	■ LAD01.012612

FRESA LAMELLO IN DIAMANTE PER INCASTRI H4
SAW BLADE IN DIAMOND FOR LAMELLO H4

- FRESA PER INCASTRI IN DIAMANTE LAMELLO, INDICATE PER LAVORAZIONI SU MACCHINE A CNC E SU FRESATRICE MANUALI.
- *SAW BLADE IN DIAMOND LAMELLO, SUITABLE FOR WORKING ON CNC MACHINE AND PORTABLE MACHINE.*

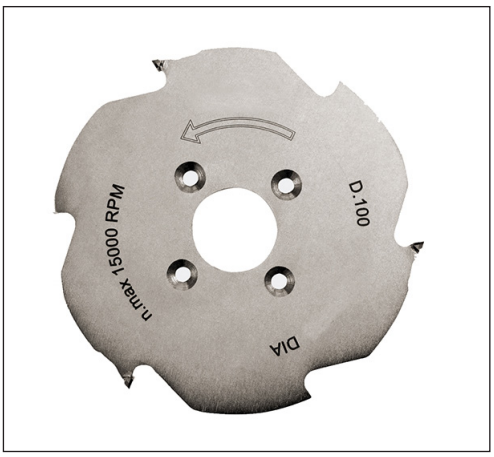

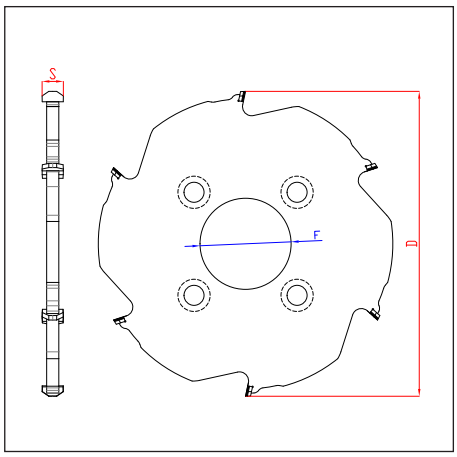

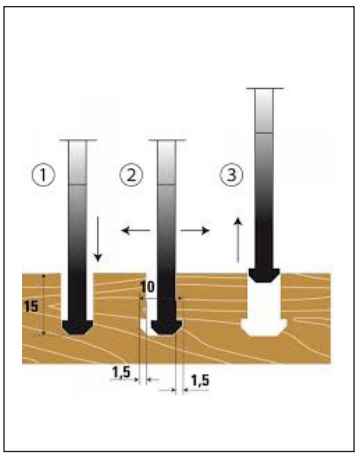

● = ready in stock ■ = delivery time 20 working day ▲ = on request

D	S	b	F.	PH	Z	H	CODE
100,4	7	4	22	2	3	4	● LSD.16.0034.DA009
100,4	7	4	22	2	6	4	● LSD.16.0064.DA009
100,4	7	4	30	2	3	4	● LSD.16.0034.DA015
100,4	7	4	30	2	6	4	● LSD.16.0064.DA015

FRESA LAMELLO IN DIAMANTE PER INCASTRI A BISCOTTO H4
SAW BLADE BISCUIT IN DIAMOND FOR LAMELLO H4

- FRESA PER INCASTRI IN DIAMANTE LAMELLO, INDICATE PER LAVORAZIONI SU MACCHINE A CNC E SU FRESATRICE MANUALI.
- *SAW BLADE IN DIAMOND LAMELLO, SUITABLE FOR WORKING ON CNC MACHINE AND PORTABLE MACHINE.*

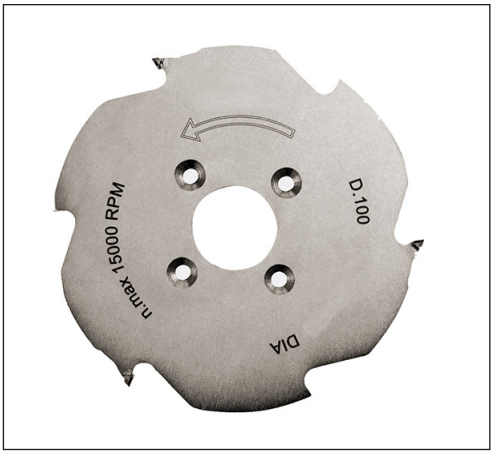

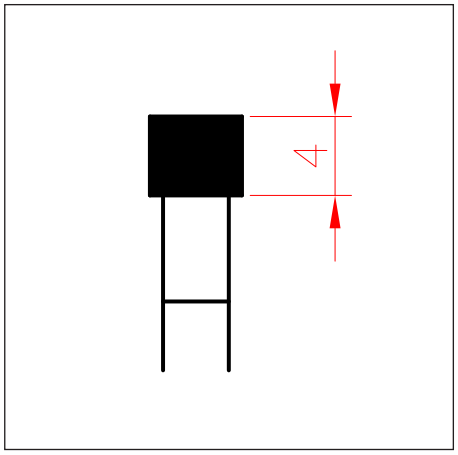

● = ready in stock ■ = delivery time 20 working day ▲ = on request

D	S	b	F.	PH	Z	H	CODE
100	3,96	3	22	2	6	4	■ LSD.16.0034.DA010
100	3,96	3	22	2	8	4	■ LSD.16.0064.DA011

DORIGO UTENSILI
DIAMOND & HARD METAL TOOLS

LAME IN DIAMANTE PER MATERIALI ABRASIVI H3
SAW BLADE IN DIAMOND FOR ABRASIVE MATERIAL H3

- LAME IN DIAMANTE PER IL TAGLIO DI MATERIALI DURI E ABRASIVI COME FIBROCEMENTO, CARTONGESSO, DA MONTARE SU MACCHINE PORTATILI.
- *SAW BLADE IN DIAMOND PER CUTTING ABRASIVE MATERIAL SUCH AS FIBER CEMENT AND PLASTERBOARD. TO BE USED ON PORTABLE MACHINES.*

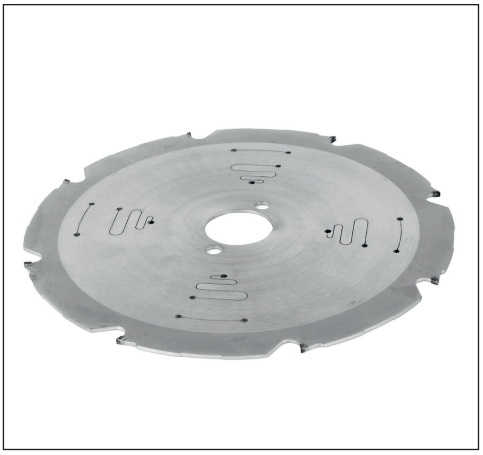

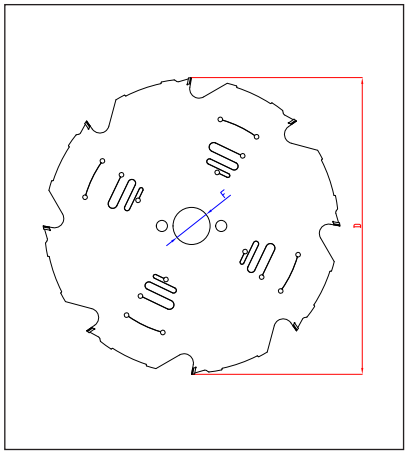

● = ready in stock ■ = delivery time 20 working day ▲ = on request

D	S	b	F.	PH	Z	H	CODE
160	2,4	2,4	20	2/6/32	4	3	● LFD01004
160	2,4	2,4	20	2/6/32	8	3	● LFD01008
190	2,4	2,4	20	2/6/32	4	3	● LFD01004
190	2,4	2,4	20	2/6/32	8	3	● LFD01008
200	2,4	2,4	30	2/7/42	4	3	● LFD01004
200	2,4	2,4	30	2/7/42	8	3	● LFD01008
216	2,4	2,4	30	/	8	3	● LFD01008
216	2,4	2,4	30	/	12	3	● LFD010012
230	2,4	2,4	30	2/7/42	6	3	● LFD01OO6
230	2,4	2,4	30	2/7/42	12	3	● LFD010012
250	2,4	2,4	30	PH2	6	3	● LFD01OO6
250	2,4	2,4	30	PH2	12	3	● LFD010012
300	2,4	2,4	30	PH2	12	3	● LFD010012
300	2,4	2,4	30	PH2	20	3	● LFD010020

LAME IN DIAMANTE PER MATERIALI ABRASIVI MERCATO U.S.A./CANADA
SAW BLADE IN DIAMOND FOR ABRASIVE MATERIAL U.S.A. /CANADA MARKET

- LAME IN DIAMANTE PER IL TAGLIO DI MATERIALI DURI E ABRASIVI COME FIBROCEMENTO, CARTONGESSO, DA MONTARE SU MACCHINE PORTATILI.
- *SAW BLADE IN DIAMOND PER CUTTING ABRASIVE MATERIAL SUCH AS FIBER CEMENT AND PLASTERBOARD. TO BE USED ON PORTABLE MACHINES.*

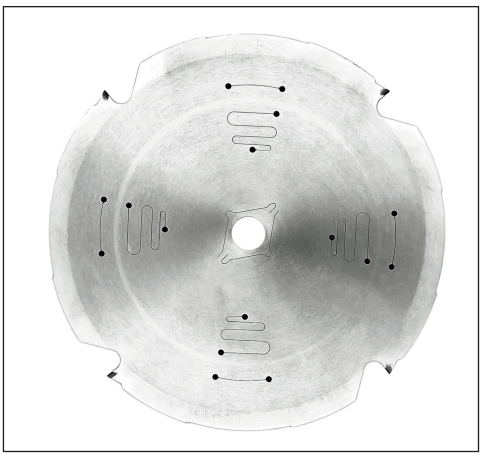

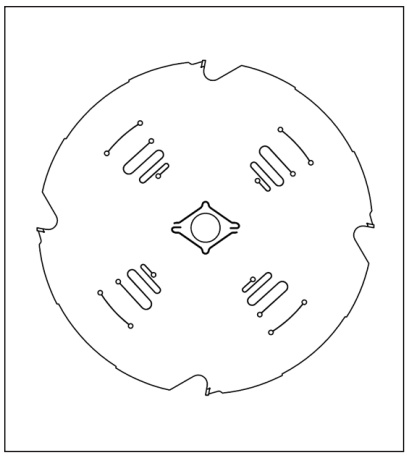

● = ready in stock ■ = delivery time 20 working day ▲ = on request

D inches	D mm	S	b	F.	PH	Z	H	CODE
3-3/8	85	2,4	1,6	15 mm		4	3	● LFD0010485
6-1/2	165	2,4	1,6	5/8		8	3	● LFD00108165
7-1/4	184	2,4	1,6	5/8		4	3	● LFD00104184
10	254	2,4	1,6	5/8		8	3	● LFD00104254
12	305	2,4	1,6	1		8	3	● LFD00108305

TRUCIOLATORE IN DIAMANTE POWER SYSTEM
DIAMOND HOGGERS POWER SYSTEM

- TRUCIOLATORI IN DIAMANTE PER LE LAVORAZIONI DI PANNELLI TRUCIOLARI, NOBILITATI, LAMINATI, M.D.F. UTILIZZABILI SU MACCHINE SQUADRATRICI E SQUADRA BORDATRICI. CORPO IN ACCIAIO AD ALTA RESISTENZA.
- *HOGGERS IN DIAMOND, SUITABLE FOR WORKING ON CHIPBOARD PANELS, LAMINATED, M.D.F. IT CAN BE USED ON SQUARING MACHINES AND SQUARING-EDGING MACHINES. STEEL BODY WITH HIGH RESISTANCE.*

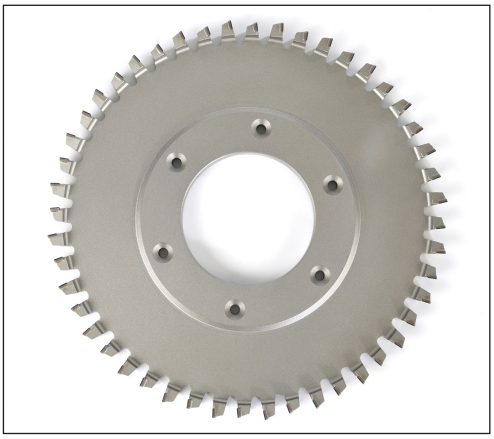

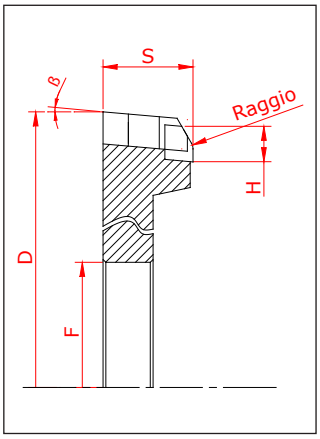

● = ready in stock ■ = delivery time 20 working day ▲ = on request

D	S	F	Z	Max feed m/min	H	CODE RH	CODE LH
220	16	*	18+18+12	24	6	■ TRD F2201618126R	■ TRD F2201618126L
220	16	*	24+24+12	36	6	■ TRD F2201624126R	■ TRD F2201624126L
220	16	*	36+36+16	60	6	■ TRD F2201636126R	■ TRD F2201636126L
250	16	*	18+18+12	24	6	■ TRD F2501618126R	■ TRD F2501618126L
250	16	*	24+24+12	36	6	■ TRD F2501624126R	■ TRD F2501624126L
250	16	*	36+36+16	60	6	■ TRD F2501636126R	■ TRD F2501636126L
220	16	*	18+18+12	24	4	■ TRD F2201618124R	■ TRD F2201618124L
220	16	*	24+24+12	36	4	■ TRD F2201624124R	■ TRD F2201624124L
220	16	*	36+36+16	60	4	■ TRD F2201636124R	■ TRD F2201636124L
250	16	*	18+18+12	24	4	■ TRD F2501618124R	■ TRD F2501618124L
250	16	*	24+24+12	36	4	■ TRD F2501624124R	■ TRD F2501624124L
250	16	*	36+36+16	60	4	■ TRD F2501636124R	■ TRD F2501636124L

TRUCIOLATORE A SETTORI IN DIAMANTE
DIAMOND HOGGERS

- TRUCIOLATORI IN DIAMANTE A SETTORI PER LE LAVORAZIONI DI PANNELLI TRUCIOLARI, NOBILITATI, LAMINATI, M.D.F. UTILIZZABILI SU MACCHINE SQUADRATRICI E SQUADRA BORDATRICI. CORPO IN ACCIAIO AD ALTA RESISTENZA. U
- *HOGGERS IN DIAMOND, SUITABLE FOR WORKING ON CHIPBOARD PANELS, LAMINATED, M.D.F. IT CAN BE USED ON SQUARING MACHINES AND SQUARING-EDGING MACHINES. STEEL BODY WITH HIGH RESISTANCE.*

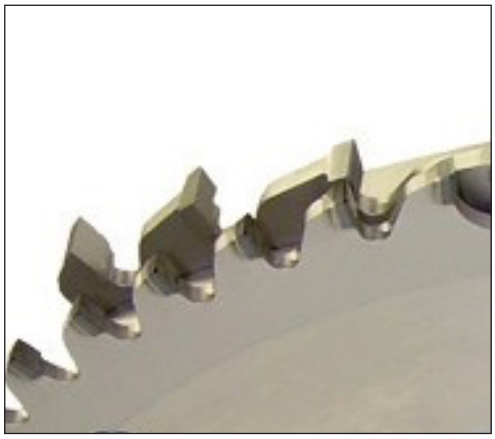

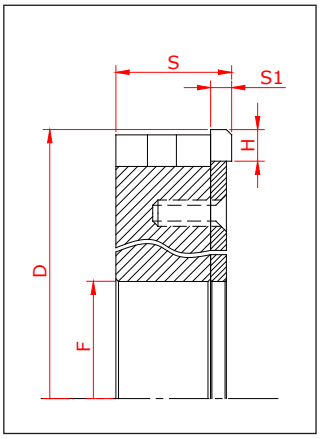

● = ready in stock ■ = delivery time 20 working day ▲ = on request

D	S	F	Z	Max feed m/min	H	CODE RH	CODE LH
220	22	*	40+12 HM	30	6	■ TRD B2202240126R	■ TRD B2202240126L
220	22	*	60+12 HM	50	6	■ TRD B2202240126R	■ TRD B2202240126L
220	22	*	66+12 HM	60	6	■ TRD B2202240126R	■ TRD B2202240126L
250	22	*	40+12 HM	30	6	■ TRD B2502240126R	■ TRD B2502240126L
250	22	*	60+12 HM	50	6	■ TRD B2502240126R	■ TRD B2502240126L
250	22	*	66+12 HM	60	6	■ TRD B2502240126R	■ TRD B2502240126L
220	22	*	40+12 HM	30	4	■ TRD B2202240124R	■ TRD B2202240124L
220	22	*	60+12 HM	50	4	■ TRD B2202240124R	■ TRD B2202240124L
220	22	*	66+12 HM	60	4	■ TRD B2202240124R	■ TRD B2202240124L
250	22	*	40+12 HM	30	4	■ TRD B2502240124R	■ TRD B2502240124L
250	22	*	60+12 HM	50	4	■ TRD B2502240124R	■ TRD B2502240124L
250	22	*	66+12 HM	60	4	■ TRD B2502240124R	■ TRD B2502240124L

TRUCIOLATORE COMPATTO IN DIAMANTE CON TAGLIENTI NEGATIVO
DIAMOND HOGGERS NEGATIVE

- TRUCIOLATORI IN DIAMANTE CON TAGLIENTI NEGATIVI PER LE LAVORAZIONI DI PANNELLI TRUCIOLARI, NOBILITATI, LAMINATI, M.D.F. UTILIZZABILI SU MACCHINE SQUADRATRICI E SQUADRABORDATRICI. CORPO IN ACCIAIO AD ALTA RESISTENZA.
- *HOGGERS IN DIAMOND WITH NEGATIVE CUTTING , SUITABLE FOR WORKING ON CHIPBOARD PANELS, LAMINATED, M.D.F. IT CAN BE USED ON SQUARING MACHINES AND SQUARING-EDGING MACHINES. STEEL BODY WITH HIGH RESISTANCE.*

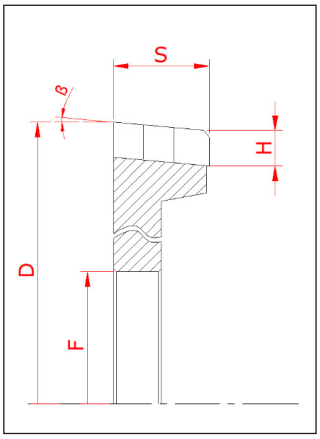

● = ready in stock ■ = delivery time 20 working day ▲ = on request

D	S	F	Z	Max feed m/min	H	CODE RH	CODE LH
220	16	*	30+6+6	30	6	■ TRD D2201630666R	■ TRD D2201630666L
220	16	*	36+6+6	40	6	■ TRD D2201636666R	■ TRD D2201636666L
220	16	*	42+6+6	45	6	■ TRD D2201642666R	■ TRD D2201642666L
220	16	*	48+6+6	50	6	■ TRD D2201648666R	■ TRD D2201648666L
220	16	*	54+6+6	60	6	■ TRD D2201654666R	■ TRD D2201654666L
250	16	*	30+6+6	30	6	■ TRD D2501630666R	■ TRD D2501630666L
250	16	*	36+6+6	40	6	■ TRD D2501636666R	■ TRD D2501636666L
250	16	*	42+6+6	45	6	■ TRD D2501642666R	■ TRD D2501642666L
250	16	*	48+6+6	50	6	■ TRD D2501648666R	■ TRD D2501648666L
250	16	*	54+6+6	60	6	■ TRD D2501654666R	■ TRD D2501654666L
220	16	*	30+6+6	30	4	■ TRD D2201630664R	■ TRD D2201630664L
220	16	*	36+6+6	40	4	■ TRD D2201636664R	■ TRD D2201636664L
220	16	*	42+6+6	45	4	■ TRD D2201642664R	■ TRD D2201642664L
220	16	*	48+6+6	60	4	■ TRD D2201648664R	■ TRD D2201648664L
220	16	*	54+6+6	60	4	■ TRD D2201654664R	■ TRD D2201654664L
250	16	*	30+6+6	30	4	■ TRD D2501630664R	■ TRD D2501630664L
250	16	*	36+6+6	40	4	■ TRD D2501636664R	■ TRD D2501636664L
250	16	*	42+6+6	45	4	■ TRD D2501642664R	■ TRD D2501642664L
250	16	*	48+6+6	50	4	■ TRD D2501648664R	■ TRD D2501648664L
250	16	*	54+6+6	60	4	■ TRD D2501654664R	■ TRD D2501654664L

TRUCIOLATORE COMPATTO IN DIAMANTE CON TAGLIENTI POSITIVI
DIAMOND HOGGERS POSITIVE

- TRUCIOLATORI IN DIAMANTE CON TAGLIENTI POSITIVI PER LE LAVORAZIONI DI PANNELLI TRUCIOLARI, NOBILITATI, LAMINATI, M.D.F. UTILIZZABILI SU MACCHINE SQUADRATRICI E SQUADRABORDATRICI. CORPO IN ACCIAIO AD ALTA RESISTENZA.
- *HOGGERS IN DIAMOND WITH POSITIVE CUTTING , SUITABLE FOR WORKING ON CHIPBOARD PANELS, LAMINATED, M.D.F. IT CAN BE USED ON SQUARING MACHINES AND SQUARING-EDGING MACHINES. STEEL BODY WITH HIGH RESISTANCE.*

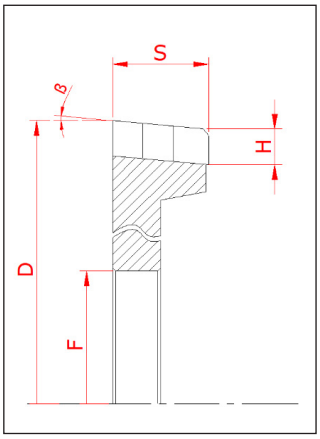

● = ready in stock ■ = delivery time 20 working day ▲ = on request

D	S	F	Z	Max feed m/min	H	CODE RH	CODE LH
220	16	*	30+6+6	30	6	■ TRD D2201630666R	■ TRD D2201630666L
220	16	*	36+6+6	40	6	■ TRD D2201636666R	■ TRD D2201636666L
220	16	*	42+6+6	45	6	■ TRD D2201642666R	■ TRD D2201642666L
220	16	*	48+6+6	50	6	■ TRD D2201648666R	■ TRD D2201648666L
220	16	*	54+6+6	60	6	■ TRD D2201654666R	■ TRD D2201654666L
250	16	*	30+6+6	30	6	■ TRD D2501630666R	■ TRD D2501630666L
250	16	*	36+6+6	40	6	■ TRD D2501636666R	■ TRD D2501636666L
250	16	*	42+6+6	45	6	■ TRD D2501642666R	■ TRD D2501642666L
250	16	*	48+6+6	50	6	■ TRD D2501648666R	■ TRD D2501648666L
250	16	*	54+6+6	60	6	■ TRD D2501654666R	■ TRD D2501654666L
220	16	*	30+6+6	30	4	■ TRD D2201630664R	■ TRD D2201630664L
220	16	*	36+6+6	40	4	■ TRD D2201636664R	■ TRD D2201636664L
220	16	*	42+6+6	45	4	■ TRD D2201642664R	■ TRD D2201642664L
220	16	*	48+6+6	60	4	■ TRD D2201648664R	■ TRD D2201648664L
220	16	*	54+6+6	60	4	■ TRD D2201654664R	■ TRD D2201654664L
250	16	*	30+6+6	30	4	■ TRD D2501630664R	■ TRD D2501630664L
250	16	*	36+6+6	40	4	■ TRD D2501636664R	■ TRD D2501636664L
250	16	*	42+6+6	45	4	■ TRD D2501642664R	■ TRD D2501642664L
250	16	*	48+6+6	50	4	■ TRD D2501648664R	■ TRD D2501648664L
250	16	*	54+6+6	60	4	■ TRD D2501654664R	■ TRD D2501654664L

FRESA BORDATRICE FISSA ASSIALITÀ 30° - H3
JOINTING CUTTERS IN DIAMOND WITH ELICOIDAL AXIAL 30° - H3

- FRESA A FINIRE FISSA PER BORDATRICI, ADATTA PER LAVORAZIONI DI PANNELLI NOBILITATI, TRUCIOLARI, RIVESTITI, IMPIALLACCIATI, LAMINATI, M.D.F., OTTIMA FINITURA, BASSA RUMOROSITÀ.
- *JOINTING CUTTERS IN DIAMOND FOR EDGE BANDING MACHINERY, SUITABLE FOR WORKING COATED, CHIPBOARD PANELS, VENEERED, LAMINATED, M.D.F. EXCELLENT FINISHING, LOW NOISINESS.*

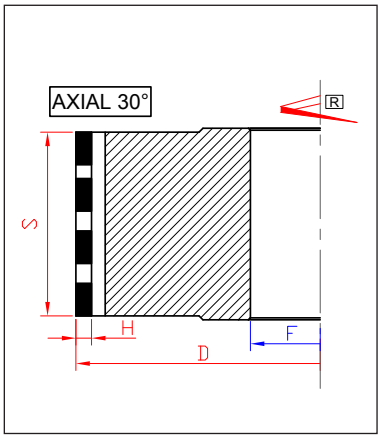

● = ready in stock ■ = delivery time 20 working day ▲ = on request

D	S	F	Z	Z.TOT	S/AS	TYPE	AXIAL	H	MACHINE	CODE RH	CODE LH
60	35	20	2+2	8	AS	6	30°	3	Cheisa	■ BFD01.0603.A000.R	■ BFD01.0603.A000.L
60	50	25	2+2	12	AS	1	30°	3	Fravol	■ BFD01.0603.A000.R	■ BFD01.0603.A000.L
60	50	25	2+2	12	AS	6	30°	3	Felder	■ BFD01.0603.A000.R	■ BFD01.0603.A000.L
60	50	20	2+2	12	AS	7	30°	3		■ BFD01.0603.A000.R	■ BFD01.0603.A000.L
60	55	20	2+2	14	AS	1	30°	3		■ BFD01.0603.A000.R	■ BFD01.0603.A000.L
60	55	25	2+2	14	AS	1	30°	3		■ BFD01.0603.A000.R	■ BFD01.0603.A000.L
60	55	16	2+2	14	S	2	30°	3		■ BFD01.0603.A000.R	■ BFD01.0603.A000.L
60	55	20	2+2	14	AS	7	30°	3	Cheisa	■ BFD01.0603.A000.R	■ BFD01.0603.A000.L
60	55	25	2+2	14	AS	2	30°	3	Casadei	■ BFD01.0603.A000.R	■ BFD01.0603.A000.L
60	65	16	2+2	16	AS	1	30°	3		■ BFD01.0603.A000.R	■ BFD01.0603.A000.L
60	65	25	2+2	16	AS	1	30°	3	Felder/Fravol	■ BFD01.0603.A000.R	■ BFD01.0603.A000.L
60	65	25	2+2	16	AS	7	30°	3	Fravol	■ BFD01.0603.A000.R	■ BFD01.0603.A000.L
70	45	30	2+2	12	AS	6	30°	3		■ BFD01.0703.A000.R	■ BFD01.0703.A000.L
70	50	30	2+2	12	AS	10	30°	3	Holz-Her	■ BFD01.0703.A000.R	■ BFD01.0703.A000.L
70	50	30	2+2	12	AS	2	30°	3	Holz-Her	■ BFD01.0703.A000.R	■ BFD01.0703.A000.L
70	50	30	2+2	12	AS	7	30°	3		■ BFD01.0703.A000.R	■ BFD01.0703.A000.L
70	50	25	2+2	12	AS	6	30°	3	Hebrock X	■ BFD01.0703.A000.R	■ BFD01.0703.A000.L
70	55	30	2+2	14	AS	10	30°	3	Holz-Her	■ BFD01.0703.A000.R	■ BFD01.0703.A000.L
70	65	30	2+2	16	AS	10	30°	3	Holz-Her	■ BFD01.0703.A000.R	■ BFD01.0703.A000.L
80	30	30	2+2	8	S	3	30	3	Biesse Akron-Stream	■ BFD01.0803.A000.R	■ BFD01.0803.A000.L
80	40	30	2+2	10	AS	1	30°	3	Scm	■ BFD01.0803.A000.R	■ BFD01.0803.A000.L
80	45	30	2+2	12	S	3	30°	3	Biesse Akron-Stream	■ BFD01.0803.A000.R	■ BFD01.0803.A000.L
80	50	30	2+2	12	AS	1	30°	3		■ BFD01.0803.A000.R	■ BFD01.0803.A000.L
80	50	30	2+2	12	AS	6	30°	3	Felder	■ BFD01.0803.A000.R	■ BFD01.0803.A000.L
80	50	20	2+2	12	S	2	30°	3	Biesse Akron	■ BFD01.0803.A000.R	■ BFD01.0803.A000.L

FRESA BORDATRICE FISSA ASSIALITÀ 30° - H3

JOINTING CUTTERS IN DIAMOND WITH ELICOIDAL AXIAL 30° - H3

D	S	F	Z	Z.TOT	S/AS	TYPE	AXIAL	H	MACHINE	CODE RH	CODE LH
80	55	30	2+2	14	AS	1	30°	3	Scm Minimax	■ BFD01.0603.A000.R	■ BFD01.0603.A000.L
80	55	20	2+2	14	AS	2	30°	3	Biesse Akron-Griggio	■ BFD01.0803.A000.R	■ BFD01.0803.A000.L
80	65	30	2+2	16	AS	1	30°	3		■ BFD01.0803.A000.R	■ BFD01.0803.A000.L
80	65	30	2+2	16	S	2	30°	3	Biesse Akron-Stream	■ BFD01.0803.A000.R	■ BFD01.0803.A000.L
80	65	30	2+2	16	AS	7	30°	3		■ BFD01.0803.A000.R	■ BFD01.0803.A000.L
80	65	30	2+2	16	AS	2	30°	3	Griggio	■ BFD01.0803.A000.R	■ BFD01.0803.A000.L
85	45	30	2+2	12	AS	1	30°	3	Ott	■ BFD01.0853.A000.R	■ BFD01.0853.A000.L
85	65	30	2+2	16	AS	7	30°	3	Ott	■ BFD01.0853.A000.R	■ BFD01.0853.A000.L
100	35	30	2+2	8	AS	1	30	3	Ima-Brandt	■ BFD01.1003.A000.R	■ BFD01.0603.A000.L
100	45	30	2+2	12	AS	1	30°	3		■ BFD01.1003.A000.R	■ BFD01.0603.A000.L
100	45	30	2+2	12	S	1	30°	3		■ BFD01.1003.A000.R	■ BFD01.0603.A000.L
100	45	30	2+2	12	AS	7	30°	3	Brandt	■ BFD01.1003.A000.R	■ BFD01.0603.A000.L
100	45	30	2+2	12	AS	6	30°	3	Brandt-Ebm-Hebrock	■ BFD01.1003.A000.R	■ BFD01.1003.A000.L
100	45	30	2+2	12	AS	3	30°	3		■ BFD01.1003.A000.R	■ BFD01.1003.A000.L
100	50	30	2+2	12	AS	1	30°	3		■ BFD01.1003.A000.R	■ BFD01.1003.A000.L
100	50	30	2+2	12	AS	2	30°	3	Holz-Her-Scm	■ BFD01.1003.A000.R	■ BFD01.1003.A000.L
100	50	30	2+2	12	AS	7	30°	3	Scm-Idm-Biesse-Ima-Brandt	■ BFD01.1003.A000.R	■ BFD01.1003.A000.L
100	50	30	2+2	12	AS	2	30°	3	Biesse-Idm-Ima-Brandt	■ BFD01.1003.A000.R	■ BFD01.1003.A000.L
100	55	30	2+2	14	AS	1	30°	3		■ BFD01.1003.A000.R	■ BFD01.1003.A000.L
100	55	30	2+2	14	AS	2	30°	3	Scm-Holz-Her	■ BFD01.1003.A000.R	■ BFD01.1003.A000.L
100	55	30	2+2	14	AS	7	30°	3	Biesse-Idm-Ima-Brandt	■ BFD01.1003.A000.R	■ BFD01.1003.A000.L
100	65	30	2+2	16	AS	1	30°	3		■ BFD01.1003.A000.R	■ BFD01.1003.A000.L
100	65	30	2+2	16	S	3	30°	3	Biesse Akron	■ BFD01.1003.A000.R	■ BFD01.1003.A000.L
100	65	30	2+2	16	AS	7	30°	3	Scm-Idm-Biesse-Ima-Brandt	■ BFD01.1003.A000.R	■ BFD01.1003.A000.L
100	65	30	2+2	16	AS	2	30°	3	Scm Holz-Her	■ BFD01.1003.A000.R	■ BFD01.1003.A000.L
100	65	20	2+2	16	AS	2	30°	3	Cheisa	■ BFD01.1003.A000.R	■ BFD01.1003.A000.L
100	65	30	2+2	16	AS	2	30°	3	Holz-Her	■ BFD01.1003.A000.R	■ BFD01.1003.A000.L
100	65	30	2+2	16	S	2	30°	3	Holz-Her	■ BFD01.1003.A000.R	■ BFD01.1003.A000.L

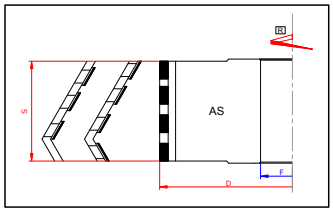

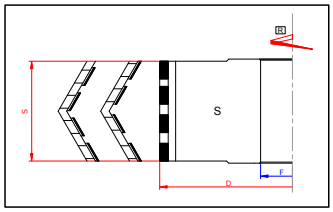

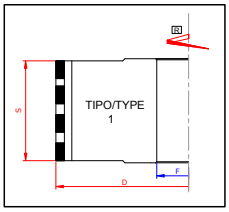

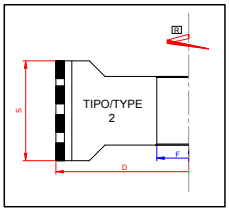

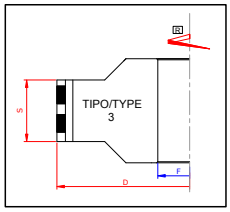

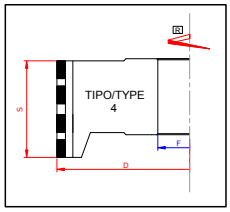

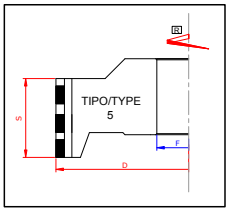

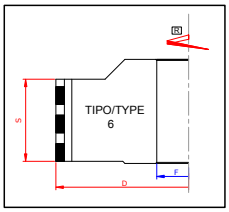

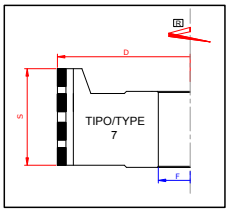

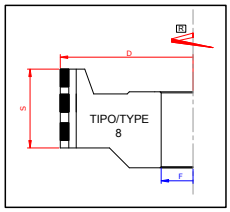

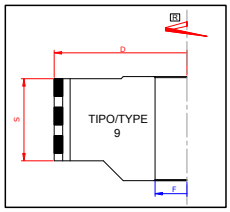

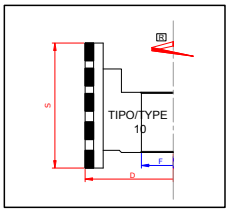

FRESA BORDATRICE FISSA ASSIALITÀ 30° - H3
JOINTING CUTTERS IN DIAMOND WITH ELICOIDAL AXIAL 30° - H3

- FRESA A FINIRE FISSA PER BORDATRICI, ADATTA PER LAVORAZIONI DI PANNELLI NOBILITATI, TRUCIOLARI, RIVESTITI, IMPIALLACCIATI, LAMINATI, M.D.F., OTTIMA FINITURA, BASSA RUMOROSITÀ.
- *JOINTING CUTTERS IN DIAMOND FOR EDGE BANDING MACHINERY, SUITABLE FOR WORKING COATED, CHIPBOARD PANELS, VENEERED, LAMINATED, M.D.F. EXCELLENT FINISHING, LOW NOISINESS.*

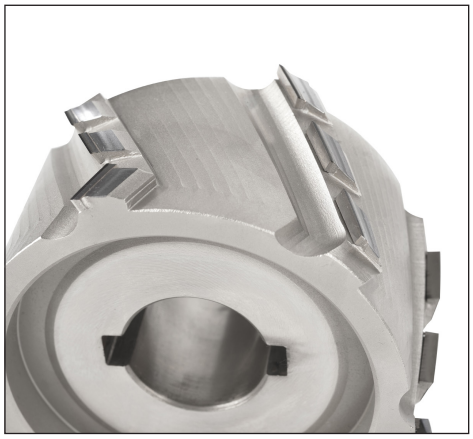

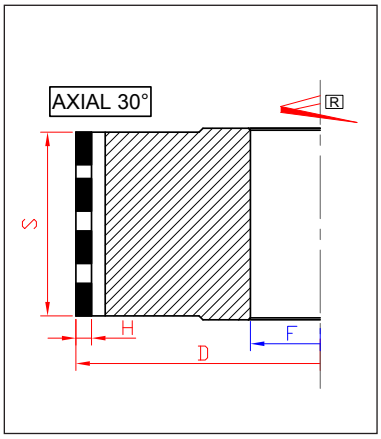

● = ready in stock ■ = delivery time 20 working day ▲ = on request

D	S	F	Z	Z.TOT	S/AS	TYPE	AXIAL	H	MACHINE	CODE RH	CODE LH
60	35	20	3+3	12	AS	6	30°	3	Cheisa	■ BFD02.0603.A035.R	■ BFD02.0603.A035.L
60	50	25	3+3	18	AS	1	30°	3	Fravol	■ BFD02.0603.A035.R	■ BFD02.0603.A035.L
60	50	25	3+3	18	AS	6	30°	3	Felder	■ BFD02.0603.A035.R	■ BFD02.0603.A035.L
60	50	20	3+3	18	AS	7	30°	3		■ BFD02.0603.A035.R	■ BFD02.0603.A035.L
60	55	20	3+3	21	AS	1	30°	3		■ BFD02.0603.A035.R	■ BFD02.0603.A035.L
60	55	25	3+3	21	AS	1	30°	3		■ BFD02.0603.A035.R	■ BFD02.0603.A035.L
60	55	16	3+3	21	S	2	30°	3		■ BFD02.0603.A035.R	■ BFD02.0603.A035.L
60	55	20	3+3	21	AS	7	30°	3	Cheisa	■ BFD02.0603.A035.R	■ BFD02.0603.A035.L
60	55	25	3+3	21	AS	2	30°	3	Casadei	■ BFD02.0603.A035.R	■ BFD02.0603.A035.L
60	65	16	3+3	24	AS	1	30°	3		■ BFD02.0603.A035.R	■ BFD02.0603.A035.L
60	65	25	3+3	24	AS	1	30°	3	Felder/Fravol	■ BFD02.0603.A035.R	■ BFD02.0603.A035.L
60	65	25	3+3	24	AS	7	30°	3	Fravol	■ BFD02.0603.A035.R	■ BFD02.0603.A035.L
70	45	30	3+3	18	AS	6	30°	3		■ BFD02.0603.A035.R	■ BFD02.0603.A035.L
70	50	30	3+3	18	AS	10	30°	3	Holz-Her	■ BFD02.0603.A035.R	■ BFD02.0603.A035.L
70	50	30	3+3	18	AS	2	30°	3	Holz-Her	■ BFD02.0603.A035.R	■ BFD02.0603.A035.L
70	50	30	3+3	18	AS	7	30°	3		■ BFD02.0603.A035.R	■ BFD02.0603.A035.L
70	50	25	3+3	18	AS	6	30°	3	Hebrock X	■ BFD02.0603.A035.R	■ BFD02.0603.A035.L
70	55	30	3+3	21	AS	10	30°	3	Holz-Her	■ BFD02.0603.A035.R	■ BFD02.0603.A035.L
70	65	30	3+3	24	AS	10	30°	3	Holz-Her	■ BFD02.0603.A035.R	■ BFD02.0603.A035.L
80	30	30	3+3	12	S	3	30	3	Biesse Akron-Stream	■ BFD02.0603.A035.R	■ BFD02.0603.A035.L
80	40	30	3+3	15	AS	1	30°	3	Scm	■ BFD02.0603.A035.R	■ BFD02.0603.A035.L
80	45	30	3+3	18	S	3	30°	3	Biesse Akron-Stream	■ BFD02.0603.A035.R	■ BFD02.0603.A035.L
80	50	30	3+3	21	AS	1	30°	3		■ BFD02.0603.A035.R	■ BFD02.0603.A035.L
80	50	30	3+3	21	AS	6	30°	3	Felder	■ BFD02.0603.A035.R	■ BFD02.0603.A035.L
80	50	20	3+3	21	S	2	30°	3	Biesse Akron	■ BFD02.0603.A035.R	■ BFD02.0603.A035.L

FRESA BORDATRICE FISSA ASSIALITÀ 30° - H3
JOINTING CUTTERS IN DIAMOND WITH ELICOIDAL AXIAL 30° - H3

D	S	F	Z	Z.TOT	S/AS	TYPE	AXIAL	H	MACHINE	CODE RH	CODE LH
80	55	30	3+3	21	AS	1	30°	3	Scm Minimax	■ BFD02.0603.A035.R	■ BFD02.0603.A035.L
80	55	20	3+3	21	AS	2	30°	3	Biesse Akron-Griggio	■ BFD02.0603.A035.R	■ BFD02.0603.A035.L
80	65	30	3+3	24	AS	1	30°	3		■ BFD02.0603.A035.R	■ BFD02.0603.A035.L
80	65	30	3+3	24	S	2	30°	3	Biesse Akron-Stream	■ BFD02.0603.A035.R	■ BFD02.0603.A035.L
80	65	30	3+3	24	AS	7	30°	3		■ BFD02.0603.A035.R	■ BFD02.0603.A035.L
80	65	30	3+3	24	AS	2	30°	3	Griggio	■ BFD02.0603.A035.R	■ BFD02.0603.A035.L
85	45	30	3+3	18	AS	1	30°	3	Ott	■ BFD02.0603.A035.R	■ BFD02.0603.A035.L
85	65	30	3+3	24	AS	7	30°	3	Ott	■ BFD02.0603.A035.R	■ BFD02.0603.A035.L
100	35	30	3+3	12	AS	1	30	3	Ima-Brandt	■ BFD02.0603.A035.R	■ BFD02.0603.A035.L
100	45	30	3+3	18	AS	1	30°	3		■ BFD02.0603.A035.R	■ BFD02.0603.A035.L
100	45	30	3+3	18	S	1	30°	3		■ BFD02.0603.A035.R	■ BFD02.0603.A035.L
100	45	30	3+3	18	AS	7	30°	3	Brandt	■ BFD02.0603.A035.R	■ BFD02.0603.A035.L
100	45	30	3+3	18	AS	6	30°	3	Brandt-Ebm-Hebrock	■ BFD02.0603.A035.R	■ BFD02.0603.A035.L
100	45	30	3+3	18	AS	3	30°	3		■ BFD02.0603.A035.R	■ BFD02.0603.A035.L
100	50	30	3+3	21	AS	1	30°	3		■ BFD02.0603.A035.R	■ BFD02.0603.A035.L
100	50	30	3+3	21	AS	2	30°	3	Holz-Her-Scm	■ BFD02.0603.A035.R	■ BFD02.0603.A035.L
100	50	30	3+3	21	AS	7	30°	3	Scm-Idm-Biesse-Ima-Brandt	■ BFD02.0603.A035.R	■ BFD02.0603.A035.L
100	50	30	3+3	21	AS	2	30°	3	Biesse-Idm-Ima-Brandt	■ BFD02.0603.A035.R	■ BFD02.0603.A035.L
100	55	30	3+3	21	AS	1	30°	3		■ BFD02.0603.A035.R	■ BFD02.0603.A035.L
100	55	30	3+3	21	AS	2	30°	3	Scm-Holz-Her	■ BFD02.0603.A035.R	■ BFD02.0603.A035.L
100	55	30	3+3	21	AS	7	30°	3	Biesse-Idm-Ima-Brandt	■ BFD02.0603.A035.R	■ BFD02.0603.A035.L
100	65	30	3+3	24	AS	1	30°	3		■ BFD02.0603.A035.R	■ BFD02.0603.A035.L
100	65	30	3+3	24	S	3	30°	3	Biesse Akron	■ BFD02.0603.A035.R	■ BFD02.0603.A035.L
100	65	30	3+3	24	AS	7	30°	3	Scm-Idm-Biesse-Ima-Brandt	■ BFD02.0603.A035.R	■ BFD02.0603.A035.L
100	65	30	3+3	24	AS	2	30°	3	Scm Holz-Her	■ BFD02.0603.A035.R	■ BFD02.0603.A035.L
100	65	20	3+3	24	AS	2	30°	3	Cheisa	■ BFD02.0603.A035.R	■ BFD02.0603.A035.L
100	65	30	3+3	24	AS	2	30°	3	Holz-Her	■ BFD02.0603.A035.R	■ BFD02.0603.A035.L
100	65	30	3+3	24	S	2	30°	3	Holz-Her	■ BFD02.0603.A035.R	■ BFD02.0603.A035.L
125	35	30	3+3	12	AS	1	30°	3	Ima-Homag	■ BFD02.0603.A035.R	■ BFD02.0603.A035.L
125	45	30	3+3	18	AS	6	30°	3		■ BFD02.0603.A035.R	■ BFD02.0603.A035.L
125	45	30	3+3	18	AS	1	30°	3	Ima	■ BFD02.0603.A035.R	■ BFD02.0603.A035.L
125	45	30	3+3	18	AS	7	30°	3	Homag	■ BFD02.0603.A035.R	■ BFD02.0603.A035.L
125	50	30	3+3	18	AS	1	30°	3		■ BFD02.0603.A035.R	■ BFD02.0603.A035.L
125	50	30	3+3	18	AS	2	30°	3	Homag	■ BFD02.0603.A035.R	■ BFD02.0603.A035.L
125	65	30	3+3	24	AS	1	30°	3		■ BFD02.0603.A035.R	■ BFD02.0603.A035.L
125	65	30	3+3	24	AS	2	30°	3	Biesse	■ BFD02.0603.A035.R	■ BFD02.0603.A035.L
125	65	30	3+3	24	AS	7	30°	3	Biesse-Scm-Ima-Brandt	■ BFD02.0603.A035.R	■ BFD02.0603.A035.L
125	65	30	3+3	24	AS	2	30°	3	Homag	■ BFD02.0603.A035.R	■ BFD02.0603.A035.L
125	65	30	3+3	24	AS	2	30°	3	Holz-Her-Griggio	■ BFD02.0603.A035.R	■ BFD02.0603.A035.L
150	45	30	3+3	18	AS	2	30°	3	Homag	■ BFD02.0603.A035.R	■ BFD02.0603.A035.L
150	65	30	3+3	24	AS	2	30°	3	Homag	■ BFD02.0603.A035.R	■ BFD02.0603.A035.L

FRESA BORDATRICE FISSA ASSIALITÀ 30° - H3

JOINTING CUTTERS IN DIAMOND WITH ELICOIDAL AXIAL 30° - H3

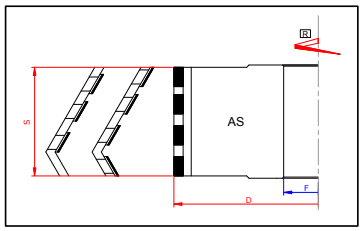

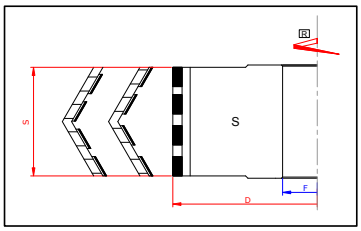

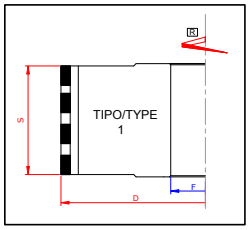

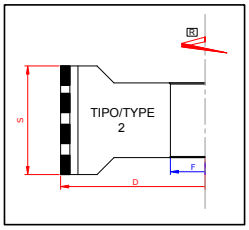

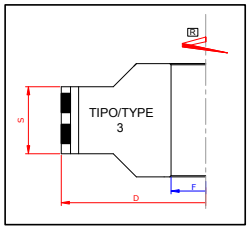

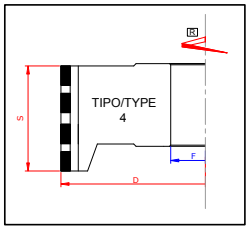

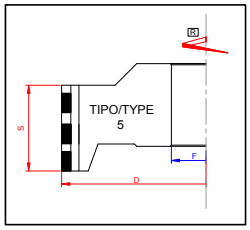

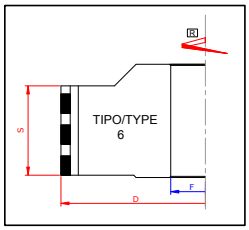

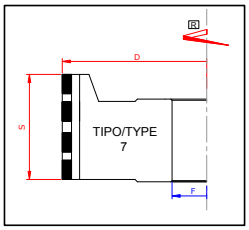

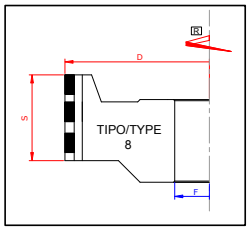

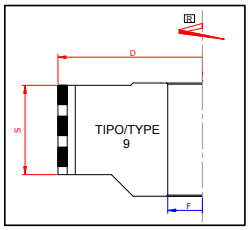

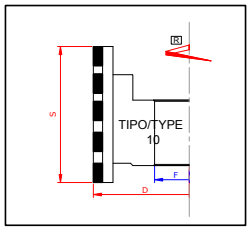

FRESA BORDATRICE FISSA ASSIALITÀ 30° - H4
JOINTING CUTTERS IN DIAMOND WITH ELICOIDAL AXIAL 30° - H4

- FRESA A FINIRE FISSA PER BORDATRICI, ADATTA PER LAVORAZIONI DI PANNELLI NOBILITATI, TRUCIOLARI, RIVESTITI, IMPIALLACCIATI, LAMINATI, M.D.F., OTTIMA FINITURA, BASSA RUMOROSITÀ.
- *JOINTING CUTTERS IN DIAMOND FOR EDGE BANDING MACHINERY, SUITABLE FOR WORKING COATED, CHIPBOARD PANELS, VENEERED, LAMINATED, M.D.F. EXCELLENT FINISHING, LOW NOISINESS.*

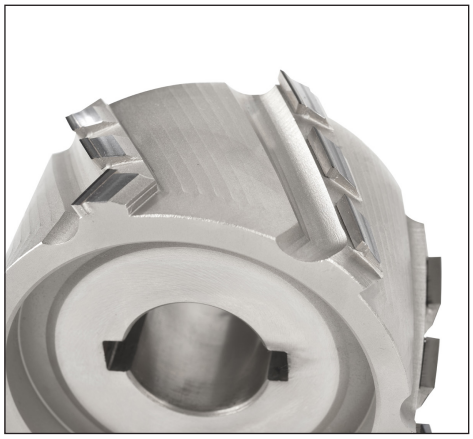

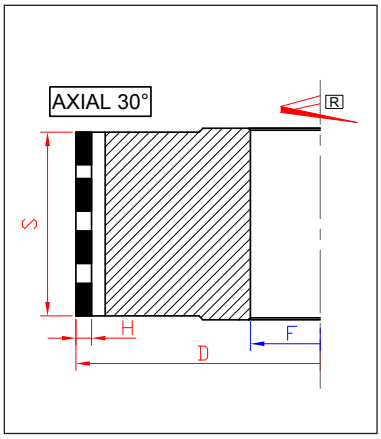

● = ready in stock ■ = delivery time 20 working day ▲ = on request

D	S	F	Z	Z.TOT	S/AS	TYPE	AXIAL	H	MACHINE	CODE RH	CODE LH
60	35	20	3+3	12	AS	6	30°	4	Cheisa	■ BFD02.0603.A035.R	■ BFD02.0603.A035.L
60	50	25	3+3	18	AS	1	30°	4	Fravol	■ BFD02.0603.A035.R	■ BFD02.0603.A035.L
60	50	25	3+3	18	AS	6	30°	4	Felder	■ BFD02.0603.A035.R	■ BFD02.0603.A035.L
60	50	20	3+3	18	AS	7	30°	4		■ BFD02.0603.A035.R	■ BFD02.0603.A035.L
60	55	20	3+3	21	AS	1	30°	4		■ BFD02.0603.A035.R	■ BFD02.0603.A035.L
60	55	25	3+3	21	AS	1	30°	4		■ BFD02.0603.A035.R	■ BFD02.0603.A035.L
60	55	16	3+3	21	S	2	30°	4		■ BFD02.0603.A035.R	■ BFD02.0603.A035.L
60	55	20	3+3	21	AS	7	30°	4	Cheisa	■ BFD02.0603.A035.R	■ BFD02.0603.A035.L
60	55	25	3+3	21	AS	2	30°	4	Casadei	■ BFD02.0603.A035.R	■ BFD02.0603.A035.L
60	65	16	3+3	24	AS	1	30°	4		■ BFD02.0603.A035.R	■ BFD02.0603.A035.L
60	65	25	3+3	24	AS	1	30°	4	Felder/Fravol	■ BFD02.0603.A035.R	■ BFD02.0603.A035.L
60	65	25	3+3	24	AS	7	30°	4	Fravol	■ BFD02.0603.A035.R	■ BFD02.0603.A035.L
70	45	30	3+3	18	AS	6	30°	4		■ BFD02.0603.A035.R	■ BFD02.0603.A035.L
70	50	30	3+3	18	AS	10	30°	4	Holz-Her	■ BFD02.0603.A035.R	■ BFD02.0603.A035.L
70	50	30	3+3	18	AS	2	30°	4	Holz-Her	■ BFD02.0603.A035.R	■ BFD02.0603.A035.L
70	50	30	3+3	18	AS	7	30°	4		■ BFD02.0603.A035.R	■ BFD02.0603.A035.L
70	50	25	3+3	18	AS	6	30°	4	Hebrock X	■ BFD02.0603.A035.R	■ BFD02.0603.A035.L
70	55	30	3+3	21	AS	10	30°	4	Holz-Her	■ BFD02.0603.A035.R	■ BFD02.0603.A035.L
70	65	30	3+3	24	AS	10	30°	4	Holz-Her	■ BFD02.0603.A035.R	■ BFD02.0603.A035.L
80	30	30	3+3	12	S	3	30	4	Biesse Akron-Stream	■ BFD02.0603.A035.R	■ BFD02.0603.A035.L
80	40	30	3+3	15	AS	1	30°	4	Scm	■ BFD02.0603.A035.R	■ BFD02.0603.A035.L
80	45	30	3+3	18	S	3	30°	4	Biesse Akron-Stream	■ BFD02.0603.A035.R	■ BFD02.0603.A035.L
80	50	30	3+3	21	AS	1	30°	4		■ BFD02.0603.A035.R	■ BFD02.0603.A035.L
80	50	30	3+3	21	AS	6	30°	4	Felder	■ BFD02.0603.A035.R	■ BFD02.0603.A035.L
80	50	20	3+3	21	S	2	30°	4	Biesse Akron	■ BFD02.0603.A035.R	■ BFD02.0603.A035.L

FRESA BORDATRICE FISSA ASSIALITÀ 30° - H4
JOINTING CUTTERS IN DIAMOND WITH ELICOIDAL AXIAL 30° - H4

D	S	F	Z	Z.TOT	S/AS	TYPE	AXIAL	H	MACHINE	CODE RH	CODE LH
80	55	30	3+3	21	AS	1	30°	4	Scm Minimax	■ BFD02.0603.A035.R	■ BFD02.0603.A035.L
80	55	20	3+3	21	AS	2	30°	4	Biesse Akron-Griggio	■ BFD02.0603.A035.R	■ BFD02.0603.A035.L
80	65	30	3+3	24	AS	1	30°	4		■ BFD02.0603.A035.R	■ BFD02.0603.A035.L
80	65	30	3+3	24	S	2	30°	4	Biesse Akron-Stream	■ BFD02.0603.A035.R	■ BFD02.0603.A035.L
80	65	30	3+3	24	AS	7	30°	4		■ BFD02.0603.A035.R	■ BFD02.0603.A035.L
80	65	30	3+3	24	AS	2	30°	4	Griggio	■ BFD02.0603.A035.R	■ BFD02.0603.A035.L
85	45	30	3+3	18	AS	1	30°	4	Ott	■ BFD02.0603.A035.R	■ BFD02.0603.A035.L
85	65	30	3+3	24	AS	7	30°	4	Ott	■ BFD02.0603.A035.R	■ BFD02.0603.A035.L
100	35	30	3+3	12	AS	1	30	4	Ima-Brandt	■ BFD02.0603.A035.R	■ BFD02.0603.A035.L
100	45	30	3+3	18	AS	1	30°	4		■ BFD02.0603.A035.R	■ BFD02.0603.A035.L
100	45	30	3+3	18	S	1	30°	4		■ BFD02.0603.A035.R	■ BFD02.0603.A035.L
100	45	30	3+3	18	AS	7	30°	4	Brandt	■ BFD02.0603.A035.R	■ BFD02.0603.A035.L
100	45	30	3+3	18	AS	6	30°	4	Brandt-Ebm-Hebrock	■ BFD02.0603.A035.R	■ BFD02.0603.A035.L
100	45	30	3+3	18	AS	3	30°	4		■ BFD02.0603.A035.R	■ BFD02.0603.A035.L
100	50	30	3+3	21	AS	1	30°	4		■ BFD02.0603.A035.R	■ BFD02.0603.A035.L
100	50	30	3+3	21	AS	2	30°	4	Holz-Her-Scm	■ BFD02.0603.A035.R	■ BFD02.0603.A035.L
100	50	30	3+3	21	AS	7	30°	4	Scm-Idm-Biesse-Ima-Brandt	■ BFD02.0603.A035.R	■ BFD02.0603.A035.L
100	50	30	3+3	21	AS	2	30°	4	Biesse-Idm-Ima-Brandt	■ BFD02.0603.A035.R	■ BFD02.0603.A035.L
100	55	30	3+3	21	AS	1	30°	4		■ BFD02.0603.A035.R	■ BFD02.0603.A035.L
100	55	30	3+3	21	AS	2	30°	4	Scm-Holz-Her	■ BFD02.0603.A035.R	■ BFD02.0603.A035.L
100	55	30	3+3	21	AS	7	30°	4	Biesse-Idm-Ima-Brandt	■ BFD02.0603.A035.R	■ BFD02.0603.A035.L
100	65	30	3+3	24	AS	1	30°	4		■ BFD02.0603.A035.R	■ BFD02.0603.A035.L
100	65	30	3+3	24	S	3	30°	4	Biesse Akron	■ BFD02.0603.A035.R	■ BFD02.0603.A035.L
100	65	30	3+3	24	AS	7	30°	4	Scm-Idm-Biesse-Ima-Brandt	■ BFD02.0603.A035.R	■ BFD02.0603.A035.L
100	65	30	3+3	24	AS	2	30°	4	Scm Holz-Her	■ BFD02.0603.A035.R	■ BFD02.0603.A035.L
100	65	20	3+3	24	AS	2	30°	4	Cheisa	■ BFD02.0603.A035.R	■ BFD02.0603.A035.L
100	65	30	3+3	24	AS	2	30°	4	Holz-Her	■ BFD02.0603.A035.R	■ BFD02.0603.A035.L
100	65	30	3+3	24	S	2	30°	4	Holz-Her	■ BFD02.0603.A035.R	■ BFD02.0603.A035.L
125	35	30	3+3	12	AS	1	30°	4	Ima-Homag	■ BFD02.0603.A035.R	■ BFD02.0603.A035.L
125	45	30	3+3	18	AS	6	30°	4		■ BFD02.0603.A035.R	■ BFD02.0603.A035.L
125	45	30	3+3	18	AS	1	30°	4	Ima	■ BFD02.0603.A035.R	■ BFD02.0603.A035.L
125	45	30	3+3	18	AS	7	30°	4	Homag	■ BFD02.0603.A035.R	■ BFD02.0603.A035.L
125	50	30	3+3	18	AS	1	30°	4		■ BFD02.0603.A035.R	■ BFD02.0603.A035.L
125	50	30	3+3	18	AS	2	30°	4	Homag	■ BFD02.0603.A035.R	■ BFD02.0603.A035.L
125	65	30	3+3	24	AS	1	30°	4		■ BFD02.0603.A035.R	■ BFD02.0603.A035.L
125	65	30	3+3	24	AS	2	30°	4	Biesse	■ BFD02.0603.A035.R	■ BFD02.0603.A035.L
125	65	30	3+3	24	AS	7	30°	4	Biesse-Scm-Ima-Brandt	■ BFD02.0603.A035.R	■ BFD02.0603.A035.L
125	65	30	3+3	24	AS	2	30°	4	Homag	■ BFD02.0603.A035.R	■ BFD02.0603.A035.L
125	65	30	3+3	24	AS	2	30°	4	Holz-Her-Griggio	■ BFD02.0603.A035.R	■ BFD02.0603.A035.L
150	45	30	3+3	18	AS	2	30°	4	Homag	■ BFD02.0603.A035.R	■ BFD02.0603.A035.L
150	65	30	3+3	24	AS	2	30°	4	Homag	■ BFD02.0603.A035.R	■ BFD02.0603.A035.L

FRESA BORDATRICE FISSA ASSIALITÀ 30° - H4

JOINTING CUTTERS IN DIAMOND WITH ELICOIDAL AXIAL 30° - H4

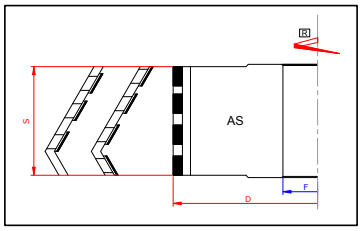

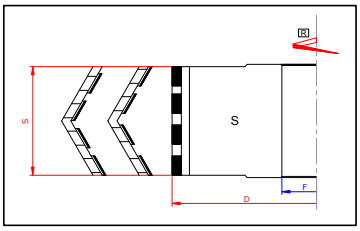

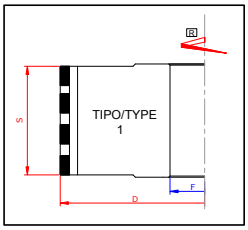

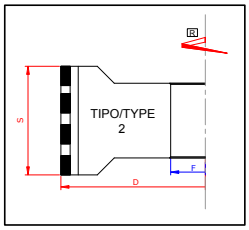

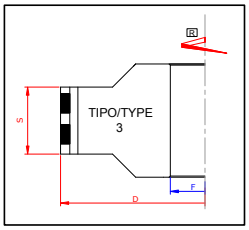

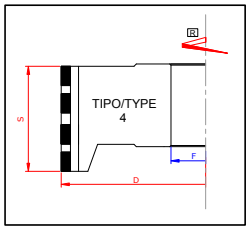

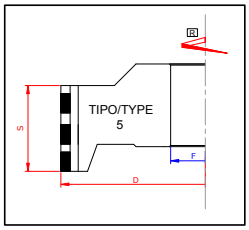

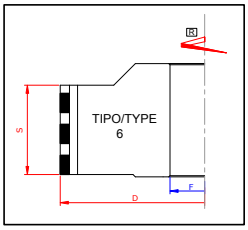

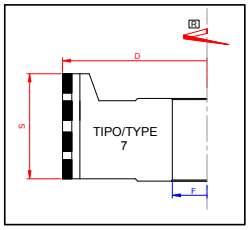

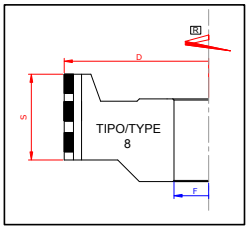

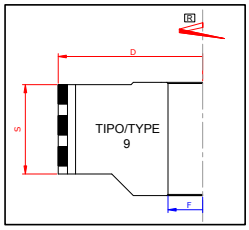

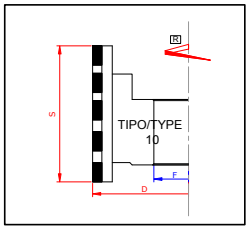

FRESA BORDATRICE FISSA ASSIALITÀ 45° - H3°

JOINTING CUTTERS IN DIAMOND WITH ELICOIDAL AXIAL 45° - H3

- FRESA A FINIRE FISSA PER BORDATRICI, ADATTA PER LAVORAZIONI DI PANNELLI NOBILITATI, TRUCIOLARI, RIVESTITI, IMPIALLACCIATI, LAMINATI, M.D.F., OTTIMA FINITURA, BASSA RUMOROSITÀ.
- *JOINTING CUTTERS IN DIAMOND FOR EDGE BANDING MACHINERY, SUITABLE FOR WORKING COATED, CHIPBOARD PANELS, VENEERED, LAMINATED, M.D.F. EXCELLENT FINISHING, LOW NOISINESS.*

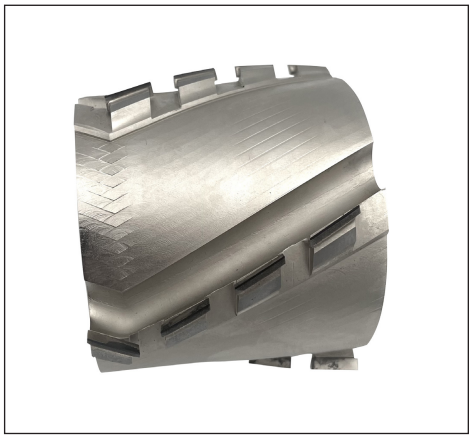

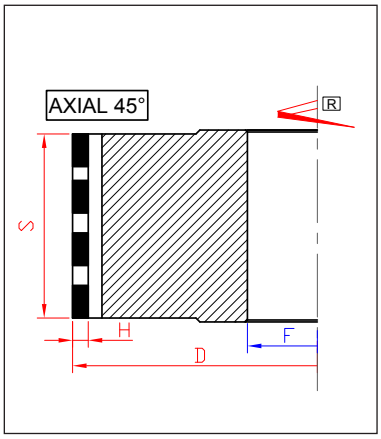

● = ready in stock ■ = delivery time 20 working day ▲ = on request

D	S	F	Z	Z.TOT	S/AS	TYPE	AXIAL	H	MACHINE	CODE RH	CODE LH
60	35	20	2+2	8	AS	6	45°	3	Cheisa	■ BFD01.060.B035.R	■ BFD01.060.B035.L
60	50	25	2+2	12	AS	1	45°	3	Fravol	■ BFD01.060.B035.R	■ BFD01.060.B035.L
60	50	25	2+2	12	AS	6	45°	3	Felder	■ BFD01.060.B035.R	■ BFD01.060.B035.L
60	50	20	2+2	12	AS	7	45°	3		■ BFD01.060.B035.R	■ BFD01.060.B035.L
60	55	20	2+2	14	AS	1	45°	3		■ BFD01.060.B035.R	■ BFD01.060.B035.L
60	55	25	2+2	14	AS	1	45°	3		■ BFD01.060.B035.R	■ BFD01.060.B035.L
60	55	16	2+2	14	S	2	45°	3		■ BFD01.060.B035.R	■ BFD01.060.B035.L
60	55	20	2+2	14	AS	7	45°	3	Cheisa	■ BFD01.060.B035.R	■ BFD01.060.B035.L
60	55	25	2+2	14	AS	2	45°	3	Casadei	■ BFD01.060.B035.R	■ BFD01.060.B035.L
60	65	16	2+2	16	AS	1	45°	3		■ BFD01.060.B035.R	■ BFD01.060.B035.L
60	65	25	2+2	16	AS	1	45°	3	Felder/Fravol	■ BFD01.060.B035.R	■ BFD01.060.B035.L
60	65	25	2+2	16	AS	7	45°	3	Fravol	■ BFD01.060.B035.R	■ BFD01.060.B035.L
70	45	30	2+2	12	AS	6	45°	3		■ BFD01.060.B035.R	■ BFD01.060.B035.L
70	50	30	2+2	12	AS	10	45°	3	Holz-Her	■ BFD01.060.B035.R	■ BFD01.060.B035.L
70	50	30	2+2	12	AS	2	45°	3	Holz-Her	■ BFD01.060.B035.R	■ BFD01.060.B035.L
70	50	30	2+2	12	AS	7	45°	3		■ BFD01.060.B035.R	■ BFD01.060.B035.L
70	50	25	2+2	12	AS	6	45°	3	Hebrock X	■ BFD01.060.B035.R	■ BFD01.060.B035.L
70	55	30	2+2	14	AS	10	45°	3	Holz-Her	■ BFD01.060.B035.R	■ BFD01.060.B035.L
70	65	30	2+2	16	AS	10	45°	3	Holz-Her	■ BFD01.060.B035.R	■ BFD01.060.B035.L
80	30	30	2+2	8	S	3	45°	3	Biesse Akron-Stream	■ BFD01.060.B035.R	■ BFD01.060.B035.L
80	40	30	2+2	10	AS	1	45°	3	Scm	■ BFD01.060.B035.R	■ BFD01.060.B035.L
80	45	30	2+2	12	S	3	45°	3	Biesse Akron-Stream	■ BFD01.060.B035.R	■ BFD01.060.B035.L
80	50	30	2+2	12	AS	1	45°	3		■ BFD01.060.B035.R	■ BFD01.060.B035.L
80	50	30	2+2	12	AS	6	45°	3	Felder	■ BFD01.060.B035.R	■ BFD01.060.B035.L
80	50	20	2+2	12	S	2	45°	3	Biesse Akron	■ BFD01.060.B035.R	■ BFD01.060.B035.L

FRESA BORDATRICE FISSA ASSIALITÀ 45° - H3

JOINTING CUTTERS IN DIAMOND WITH ELICOIDAL AXIAL 45° - H3

D	S	F	Z	Z.TOT	S/AS	TYPE	AXIAL	H	MACHINE	CODE RH	CODE LH
80	55	30	2+2	14	AS	1	45°	3	Scm Minimax	BFD01.060.B035.R	BFD01.060.B035.L
80	55	20	2+2	14	AS	2	45°	3	Biesse Akron-Griggio	BFD01.060.B035.R	BFD01.060.B035.L
80	65	30	2+2	16	AS	1	45°	3		BFD01.060.B035.R	BFD01.060.B035.L
80	65	30	2+2	16	S	2	45°	3	Biesse Akron-Stream	BFD01.060.B035.R	BFD01.060.B035.L
80	65	30	2+2	16	AS	7	45°	3		BFD01.060.B035.R	BFD01.060.B035.L
80	65	30	2+2	16	AS	2	45°	3	Griggio	BFD01.060.B035.R	BFD01.060.B035.L
85	45	30	2+2	12	AS	1	45°	3	Ott	BFD01.060.B035.R	BFD01.060.B035.L
85	65	30	2+2	16	AS	7	45°	3	Ott	BFD01.060.B035.R	BFD01.060.B035.L
100	35	30	2+2	8	AS	1	45°	3	Ima-Brandt	BFD01.060.B035.R	BFD01.060.B035.L
100	45	30	2+2	12	AS	1	45°	3		BFD01.060.B035.R	BFD01.060.B035.L
100	45	30	2+2	12	S	1	45°	3		BFD01.060.B035.R	BFD01.060.B035.L
100	45	30	2+2	12	AS	7	45°	3	Brandt	BFD01.060.B035.R	BFD01.060.B035.L
100	45	30	2+2	12	AS	6	45°	3	Brandt-Ebm-Hebrock	BFD01.060.B035.R	BFD01.060.B035.L
100	45	30	2+2	12	AS	3	45°	3		BFD01.060.B035.R	BFD01.060.B035.L
100	50	30	2+2	12	AS	1	45°	3		BFD01.060.B035.R	BFD01.060.B035.L
100	50	30	2+2	12	AS	2	45°	3	Holz-Her-Scm	BFD01.060.B035.R	BFD01.060.B035.L
100	50	30	2+2	12	AS	7	45°	3	Scm-Idm-Biesse-Ima-Brandt	BFD01.060.B035.R	BFD01.060.B035.L
100	50	30	2+2	12	AS	2	45°	3	Biesse-Idm-Ima-Brandt	BFD01.060.B035.R	BFD01.060.B035.L
100	55	30	2+2	14	AS	1	45°	3		BFD01.060.B035.R	BFD01.060.B035.L
100	55	30	2+2	14	AS	2	45°	3	Scm-Holz-Her	BFD01.060.B035.R	BFD01.060.B035.L
100	55	30	2+2	14	AS	7	45°	3	Biesse-Idm-Ima-Brandt	BFD01.060.B035.R	BFD01.060.B035.L
100	65	30	2+2	16	AS	1	45°	3		BFD01.060.B035.R	BFD01.060.B035.L
100	65	30	2+2	16	S	3	45°	3	Biesse Akron	BFD01.060.B035.R	BFD01.060.B035.L
100	65	30	2+2	16	AS	7	45°	3	Scm-Idm-Biesse-Ima-Brandt	BFD01.060.B035.R	BFD01.060.B035.L
100	65	30	2+2	16	AS	2	45°	3	Scm Holz-Her	BFD01.060.B035.R	BFD01.060.B035.L
100	65	20	2+2	16	AS	2	45°	3	Cheisa	BFD01.060.B035.R	BFD01.060.B035.L
100	65	30	2+2	16	AS	2	45°	3	Holz-Her	BFD01.060.B035.R	BFD01.060.B035.L
100	65	30	2+2	16	S	2	45°	3	Holz-Her	BFD01.060.B035.R	BFD01.060.B035.L

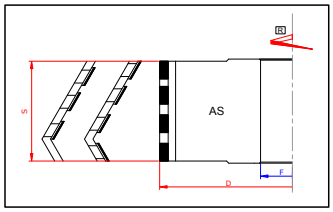

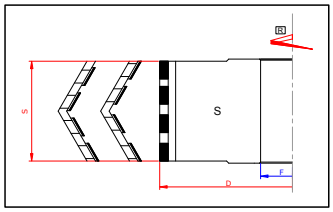

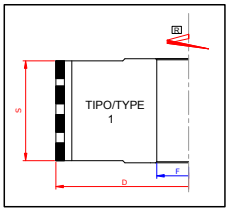

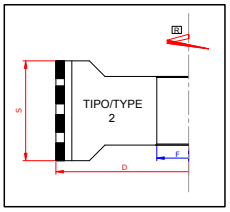

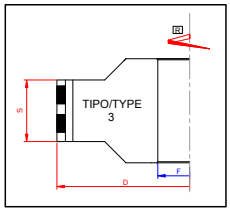

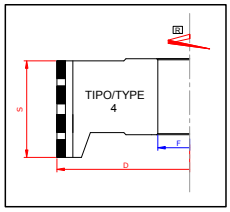

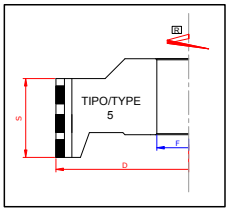

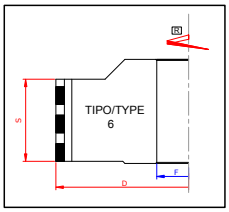

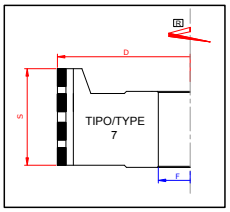

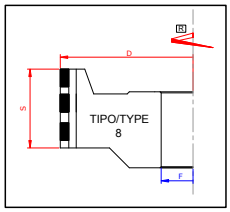

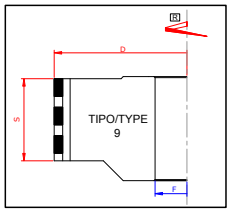

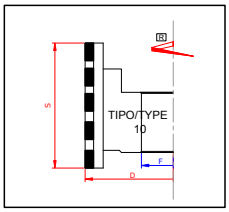

FRESA BORDATRICE FISSA ASSIALITÀ 45° - H4

JOINTING CUTTERS IN DIAMOND WITH ELICOIDAL AXIAL 45° - H4

- FRESA A FINIRE FISSA PER BORDATRICI, ADATTA PER LAVORAZIONI DI PANNELLI NOBILITATI, TRUCIOLARI, RIVESTITI, IMPIALLACCIATI, LAMINATI, M.D.F., OTTIMA FINITURA, BASSA RUMOROSITÀ.
- *JOINTING CUTTERS IN DIAMOND FOR EDGE BANDING MACHINERY, SUITABLE FOR WORKING COATED, CHIPBOARD PANELS, VENEERED, LAMINATED, M.D.F. EXCELLENT FINISHING, LOW NOISINESS.*

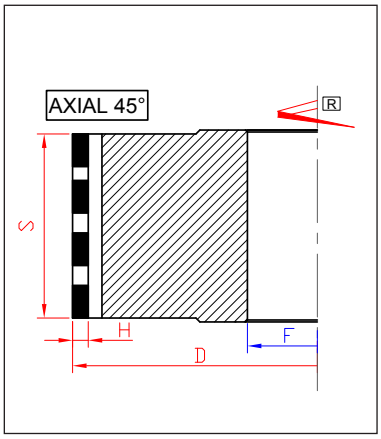

● = ready in stock ■ = delivery time 20 working day ▲ = on request

D	S	F	Z	Z.TOT	S/AS	TYPE	AXIAL	H	MACHINE	CODE RH	CODE LH
60	35	20	3+3	15	AS	6	45°	4	Cheisa	■ BFD02.0604.B035.R	■ BFD02.0604.B035.L
60	50	25	3+3	21	AS	1	45°	4	Fravol	■ BFD02.0604.B035.R	■ BFD02.0604.B035.L
60	50	25	3+3	21	AS	6	45°	4	Felder	■ BFD02.0604.B035.R	■ BFD02.0604.B035.L
60	50	20	3+3	21	AS	7	45°	4		■ BFD02.0604.B035.R	■ BFD02.0604.B035.L
60	55	20	3+3	24	AS	1	45°	4		■ BFD02.0604.B035.R	■ BFD02.0604.B035.L
60	55	25	3+3	24	AS	1	45°	4		■ BFD02.0604.B035.R	■ BFD02.0604.B035.L
60	55	16	3+3	24	S	2	45°	4		■ BFD02.0604.B035.R	■ BFD02.0604.B035.L
60	55	20	3+3	24	AS	7	45°	4	Cheisa	■ BFD02.0604.B035.R	■ BFD02.0604.B035.L
60	55	25	3+3	24	AS	2	45°	4	Casadei	■ BFD02.0604.B035.R	■ BFD02.0604.B035.L
60	65	16	3+3	30	AS	1	45°	4		■ BFD02.0604.B035.R	■ BFD02.0604.B035.L
60	65	25	3+3	30	AS	1	45°	4	Felder/Fravol	■ BFD02.0604.B035.R	■ BFD02.0604.B035.L
60	65	25	3+3	30	AS	7	45°	4	Fravol	■ BFD02.0604.B035.R	■ BFD02.0604.B035.L
70	45	30	3+3	21	AS	6	45°	4		■ BFD02.0604.B035.R	■ BFD02.0604.B035.L
70	50	30	3+3	21	AS	10	45°	4	Holz-Her	■ BFD02.0604.B035.R	■ BFD02.0604.B035.L
70	50	30	3+3	21	AS	2	45°	4	Holz-Her	■ BFD02.0604.B035.R	■ BFD02.0604.B035.L
70	50	30	3+3	21	AS	7	45°	4		■ BFD02.0604.B035.R	■ BFD02.0604.B035.L
70	50	25	3+3	21	AS	6	45°	4	Hebrock X	■ BFD02.0604.B035.R	■ BFD02.0604.B035.L
70	55	30	3+3	24	AS	10	45°	4	Holz-Her	■ BFD02.0604.B035.R	■ BFD02.0604.B035.L
70	65	30	3+3	30	AS	10	45°	4	Holz-Her	■ BFD02.0604.B035.R	■ BFD02.0604.B035.L
80	30	30	3+3	15	S	3	45°	4	Biesse Akron-Stream	■ BFD02.0604.B035.R	■ BFD02.0604.B035.L
80	40	30	3+3	21	AS	1	45°	4	Scm	■ BFD02.0604.B035.R	■ BFD02.0604.B035.L
80	45	30	3+3	21	S	3	45°	4	Biesse Akron-Stream	■ BFD02.0604.B035.R	■ BFD02.0604.B035.L
80	50	30	3+3	21	AS	1	45°	4		■ BFD02.0604.B035.R	■ BFD02.0604.B035.L
80	50	30	3+3	21	AS	6	45°	4	Felder	■ BFD02.0604.B035.R	■ BFD02.0604.B035.L
80	50	20	3+3	21	S	2	45°	4	Biesse Akron	■ BFD02.0604.B035.R	■ BFD02.0604.B035.L

FRESA BORDATRICE FISSA ASSIALITÀ 45° - H4
JOINTING CUTTERS IN DIAMOND WITH ELICOIDAL AXIAL 45° - H4

D	S	F	Z	Z.TOT	S/AS	TYPE	AXIAL	H	MACHINE	CODE RH	CODE LH
80	55	30	3+3	24	AS	1	45°	4	Scm Minimax	BFD02.0604.B035.R	BFD02.0604.B035.L
80	55	20	3+3	24	AS	2	45°	4	Biesse Akron-Griggio	BFD02.0604.B035.R	BFD02.0604.B035.L
80	65	30	3+3	30	AS	1	45°	4		BFD02.0604.B035.R	BFD02.0604.B035.L
80	65	30	3+3	30	S	2	45°	4	Biesse Akron-Stream	BFD02.0604.B035.R	BFD02.0604.B035.L
80	65	30	3+3	30	AS	7	45°	4		BFD02.0604.B035.R	BFD02.0604.B035.L
80	65	30	3+3	30	AS	2	45°	4	Griggio	BFD02.0604.B035.R	BFD02.0604.B035.L
85	45	30	3+3	21	AS	1	45°	4	Ott	BFD02.0604.B035.R	BFD02.0604.B035.L
85	65	30	3+3	30	AS	7	45°	4	Ott	BFD02.0604.B035.R	BFD02.0604.B035.L
100	35	30	3+3	15	AS	1	45°	4	Ima-Brandt	BFD02.0604.B035.R	BFD02.0604.B035.L
100	45	30	3+3	21	AS	1	45°	4		BFD02.0604.B035.R	BFD02.0604.B035.L
100	45	30	3+3	21	S	1	45°	4		BFD02.0604.B035.R	BFD02.0604.B035.L
100	45	30	3+3	21	AS	7	45°	4	Brandt	BFD02.0604.B035.R	BFD02.0604.B035.L
100	45	30	3+3	21	AS	6	45°	4	Brandt-Ebm-Hebrock	BFD02.0604.B035.R	BFD02.0604.B035.L
100	45	30	3+3	21	AS	3	45°	4		BFD02.0604.B035.R	BFD02.0604.B035.L
100	50	30	3+3	21	AS	1	45°	4		BFD02.0604.B035.R	BFD02.0604.B035.L
100	50	30	3+3	21	AS	2	45°	4	Holz-Her-Scm	BFD02.0604.B035.R	BFD02.0604.B035.L
100	50	30	3+3	21	AS	7	45°	4	Scm-Idm-Biesse-Ima-Brandt	BFD02.0604.B035.R	BFD02.0604.B035.L
100	50	30	3+3	21	AS	2	45°	4	Biesse-Idm-Ima-Brandt	BFD02.0604.B035.R	BFD02.0604.B035.L
100	55	30	3+3	24	AS	1	45°	4		BFD02.0604.B035.R	BFD02.0604.B035.L
100	55	30	3+3	24	AS	2	45°	4	Scm-Holz-Her	BFD02.0604.B035.R	BFD02.0604.B035.L
100	55	30	3+3	24	AS	7	45°	4	Biesse-Idm-Ima-Brandt	BFD02.0604.B035.R	BFD02.0604.B035.L
100	65	30	3+3	30	AS	1	45°	4		BFD02.0604.B035.R	BFD02.0604.B035.L
100	65	30	3+3	30	S	3	45°	4	Biesse Akron	BFD02.0604.B035.R	BFD02.0604.B035.L
100	65	30	3+3	30	AS	7	45°	4	Scm-Idm-Biesse-Ima-Brandt	BFD02.0604.B035.R	BFD02.0604.B035.L
100	65	30	3+3	30	AS	2	45°	4	Scm Holz-Her	BFD02.0604.B035.R	BFD02.0604.B035.L
100	65	20	3+3	30	AS	2	45°	4	Cheisa	BFD02.0604.B035.R	BFD02.0604.B035.L
100	65	30	3+3	30	AS	2	45°	4	Holz-Her	BFD02.0604.B035.R	BFD02.0604.B035.L
100	65	30	3+3	30	S	2	45°	4	Holz-Her	BFD02.0604.B035.R	BFD02.0604.B035.L
125	35	30	3+3	12	AS	1	45°	4	Ima-Homag	BFD02.0604.B035.R	BFD02.0604.B035.L
125	45	30	3+3	18	AS	6	45°	4		BFD02.0604.B035.R	BFD02.0604.B035.L
125	45	30	3+3	18	AS	1	45°	4	Ima	BFD02.0604.B035.R	BFD02.0604.B035.L
125	45	30	3+3	18	AS	7	45°	4	Homag	BFD02.0604.B035.R	BFD02.0604.B035.L
125	50	30	3+3	18	AS	1	45°	4		BFD02.0604.B035.R	BFD02.0604.B035.L
125	50	30	3+3	18	AS	2	45°	4	Homag	BFD02.0604.B035.R	BFD02.0604.B035.L
125	65	30	3+3	24	AS	1	45°	4		BFD02.0604.B035.R	BFD02.0604.B035.L
125	65	30	3+3	24	AS	2	45°	4	Biesse	BFD02.0604.B035.R	BFD02.0604.B035.L
125	65	30	3+3	24	AS	7	45°	4	Biesse-Scm-Ima-Brandt	BFD02.0604.B035.R	BFD02.0604.B035.L
125	65	30	3+3	24	AS	2	45°	4	Homag	BFD02.0604.B035.R	BFD02.0604.B035.L
125	65	30	3+3	24	AS	2	45°	4	Holz-Her-Griggio	BFD02.0604.B035.R	BFD02.0604.B035.L
150	45	30	3+3	18	AS	2	45°	4	Homag	BFD02.0604.B035.R	BFD02.0604.B035.L
150	65	30	3+3	24	AS	2	45°	4	Homag	BFD02.0604.B035.R	BFD02.0604.B035.L
125	35	30	4+4	20	AS	1	45°	4	Ima-Homag	BFD03.1254.B035.R	BFD03.1254.B035.L
125	45	30	4+4	28	AS	6	45°	4		BFD03.1254.B035.R	BFD03.1254.B035.L
125	45	30	4+4	28	AS	1	45°	4	Ima	BFD03.1254.B035.R	BFD03.1254.B035.L
125	45	30	4+4	28	AS	7	45°	4	Homag	BFD03.1254.B035.R	BFD03.1254.B035.L
125	50	30	4+4	28	AS	1	45°	4		BFD03.1254.B035.R	BFD03.1254.B035.L
125	50	30	4+4	28	AS	2	45°	4	Homag	BFD03.1254.B035.R	BFD03.1254.B035.L
125	65	30	4+4	40	AS	1	45°	4		BFD03.1254.B035.R	BFD03.1254.B035.L
125	65	30	4+4	40	AS	2	45°	4	Biesse	BFD03.1254.B035.R	BFD03.1254.B035.L
125	65	30	4+4	40	AS	7	45°	4	Biesse-Scm-Ima-Brandt	BFD03.1254.B035.R	BFD03.1254.B035.L

DORIGO UTENSILI
DIAMOND & HARD METAL TOOLS

FRESA BORDATRICE FISSA ASSIALITÀ 45° - H4

JOINTING CUTTERS IN DIAMOND WITH ELICOIDAL AXIAL 45° - H4

D	S	F	Z	Z.TOT	S/AS	TYPE	AXIAL	H	MACHINE	CODE RH	CODE LH
125	65	30	4+4	40	AS	2	45°	4	Homag	■ BFD03.1254.B035.R	■ BFD03.1254.B035.L
125	65	30	4+4	40	AS	2	45°	4	Holz-Her-Griggio	■ BFD03.1254.B035.R	■ BFD03.1254.B035.L
150	45	30	4+4	30	AS	2	45°	4	Homag	■ BFD03.1254.B035.R	■ BFD03.1254.B035.L
150	65	30	4+4	40	AS	2	45°	4	Homag	■ BFD03.1254.B035.R	■ BFD03.1254.B035.L
180	45	35	4+4	30	AS	2	45°	4	Homag	■ BFD03.1254.B035.R	■ BFD03.1254.B035.L
180	65	35	4+4	40	AS	2	45°	4	Homag	■ BFD03.1254.B035.R	■ BFD03.1254.B035.L

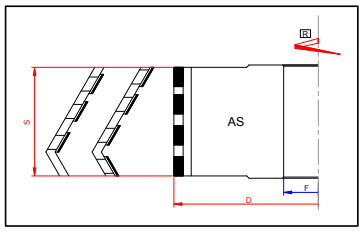

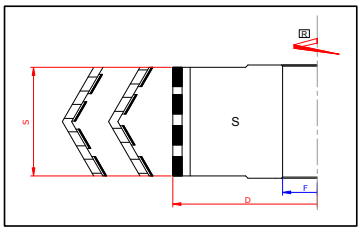

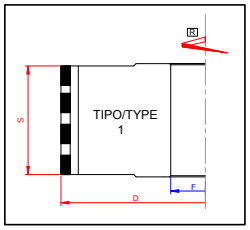

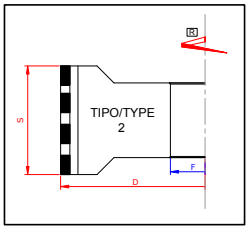

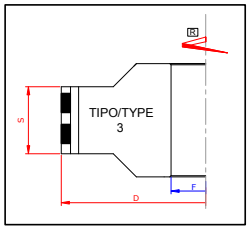

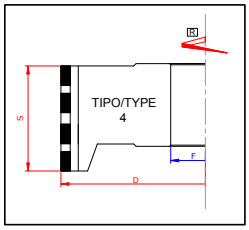

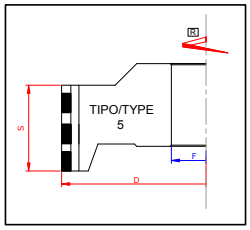

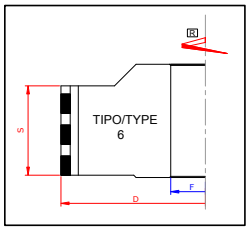

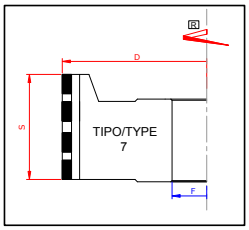

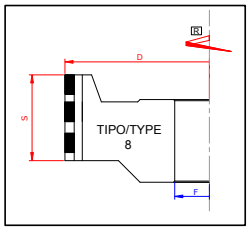

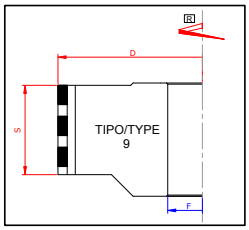

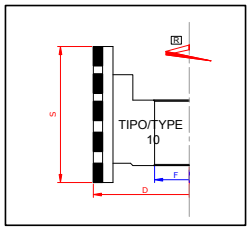

FRESA BORDATRICE FISSA ASSIALITÀ 45° - H6

JOINTING CUTTERS IN DIAMOND WITH ELICOIDAL AXIAL 45° - H6

- FRESA A FINIRE FISSA PER BORDATRICI, ADATTA PER LAVORAZIONI DI PANNELLI NOBILITATI, TRUCIOLARI, RIVESTITI, IMPIALLACCIATI, LAMINATI, M.D.F., OTTIMA FINITURA, BASSA RUMOROSITÀ.
- *JOINTING CUTTERS IN DIAMOND FOR EDGE BANDING MACHINERY, SUITABLE FOR WORKING COATED, CHIPBOARD PANELS, VENEERED, LAMINATED, M.D.F. EXCELLENT FINISHING, LOW NOISINESS.*

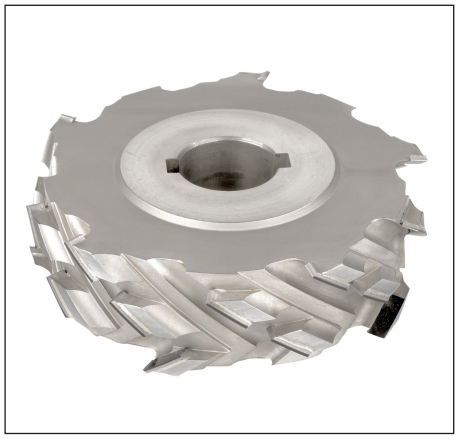

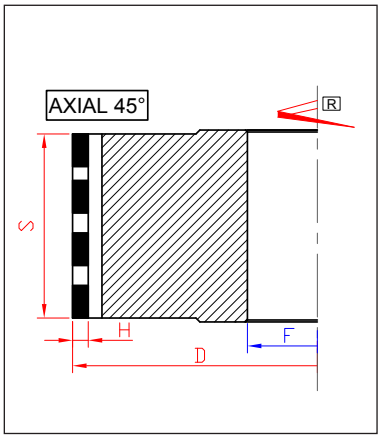

● = ready in stock ■ = delivery time 20 working day ▲ = on request

D	S	F	Z	Z.TOT	S/AS	TYPE	AXIAL	H	MACHINE	CODE RH	CODE LH
60	35	20	3+3	15	AS	6	45°	6	Cheisa	■ BFD02.0604.B035.R	■ BFD02.0604.B035.L
60	50	25	3+3	21	AS	1	45°	6	Fravol	■ BFD02.0604.B035.R	■ BFD02.0604.B035.L
60	50	25	3+3	21	AS	6	45°	6	Felder	■ BFD02.0604.B035.R	■ BFD02.0604.B035.L
60	50	20	3+3	21	AS	7	45°	6		■ BFD02.0604.B035.R	■ BFD02.0604.B035.L
60	55	20	3+3	24	AS	1	45°	6		■ BFD02.0604.B035.R	■ BFD02.0604.B035.L
60	55	25	3+3	24	AS	1	45°	6		■ BFD02.0604.B035.R	■ BFD02.0604.B035.L
60	55	16	3+3	24	S	2	45°	6		■ BFD02.0604.B035.R	■ BFD02.0604.B035.L
60	55	20	3+3	24	AS	7	45°	6	Cheisa	■ BFD02.0604.B035.R	■ BFD02.0604.B035.L
60	55	25	3+3	24	AS	2	45°	6	Casadei	■ BFD02.0604.B035.R	■ BFD02.0604.B035.L
60	65	16	3+3	30	AS	1	45°	6		■ BFD02.0604.B035.R	■ BFD02.0604.B035.L
60	65	25	3+3	30	AS	1	45°	6	Felder/Fravol	■ BFD02.0604.B035.R	■ BFD02.0604.B035.L
60	65	25	3+3	30	AS	7	45°	6	Fravol	■ BFD02.0604.B035.R	■ BFD02.0604.B035.L
70	45	30	3+3	21	AS	6	45°	6		■ BFD02.0604.B035.R	■ BFD02.0604.B035.L
70	50	30	3+3	21	AS	10	45°	6	Holz-Her	■ BFD02.0604.B035.R	■ BFD02.0604.B035.L
70	50	30	3+3	21	AS	2	45°	6	Holz-Her	■ BFD02.0604.B035.R	■ BFD02.0604.B035.L
70	50	30	3+3	21	AS	7	45°	6		■ BFD02.0604.B035.R	■ BFD02.0604.B035.L
70	50	25	3+3	21	AS	6	45°	6	Hebrock X	■ BFD02.0604.B035.R	■ BFD02.0604.B035.L
70	55	30	3+3	24	AS	10	45°	6	Holz-Her	■ BFD02.0604.B035.R	■ BFD02.0604.B035.L
70	65	30	3+3	30	AS	10	45°	6	Holz-Her	■ BFD02.0604.B035.R	■ BFD02.0604.B035.L
80	30	30	3+3	15	S	3	45°	6	Biesse Akron-Stream	■ BFD02.0604.B035.R	■ BFD02.0604.B035.L
80	40	30	3+3	21	AS	1	45°	6	Scm	■ BFD02.0604.B035.R	■ BFD02.0604.B035.L
80	45	30	3+3	21	S	3	45°	6	Biesse Akron-Stream	■ BFD02.0604.B035.R	■ BFD02.0604.B035.L
80	50	30	3+3	21	AS	1	45°	6		■ BFD02.0604.B035.R	■ BFD02.0604.B035.L
80	50	30	3+3	21	AS	6	45°	6	Felder	■ BFD02.0604.B035.R	■ BFD02.0604.B035.L
80	50	20	3+3	21	S	2	45°	6	Biesse Akron	■ BFD02.0604.B035.R	■ BFD02.0604.B035.L

FRESA BORDATRICE FISSA ASSIALITÀ 45° - H6
JOINTING CUTTERS IN DIAMOND WITH ELICOIDAL AXIAL 45° - H6

D	S	F	Z	Z.TOT	S/AS	TYPE	AXIAL	H	MACHINE	CODE RH	CODE LH
80	55	30	3+3	24	AS	1	45°	6	Scm Minimax	BFD02.0604.B035.R	BFD02.0604.B035.L
80	55	20	3+3	24	AS	2	45°	6	Biesse Akron-Griggio	BFD02.0604.B035.R	BFD02.0604.B035.L
80	65	30	3+3	30	AS	1	45°	6		BFD02.0604.B035.R	BFD02.0604.B035.L
80	65	30	3+3	30	S	2	45°	6	Biesse Akron-Stream	BFD02.0604.B035.R	BFD02.0604.B035.L
80	65	30	3+3	30	AS	7	45°	6		BFD02.0604.B035.R	BFD02.0604.B035.L
80	65	30	3+3	30	AS	2	45°	6	Griggio	BFD02.0604.B035.R	BFD02.0604.B035.L
85	45	30	3+3	21	AS	1	45°	6	Ott	BFD02.0604.B035.R	BFD02.0604.B035.L
85	65	30	3+3	30	AS	7	45°	6	Ott	BFD02.0604.B035.R	BFD02.0604.B035.L
100	35	30	3+3	15	AS	1	45°	6	Ima-Brandt	BFD02.0604.B035.R	BFD02.0604.B035.L
100	45	30	3+3	21	AS	1	45°	6		BFD02.0604.B035.R	BFD02.0604.B035.L
100	45	30	3+3	21	S	1	45°	6		BFD02.0604.B035.R	BFD02.0604.B035.L
100	45	30	3+3	21	AS	7	45°	6	Brandt	BFD02.0604.B035.R	BFD02.0604.B035.L
100	45	30	3+3	21	AS	6	45°	6	Brandt-Ebm-Hebrock	BFD02.0604.B035.R	BFD02.0604.B035.L
100	45	30	3+3	21	AS	3	45°	6		BFD02.0604.B035.R	BFD02.0604.B035.L
100	50	30	3+3	21	AS	1	45°	6		BFD02.0604.B035.R	BFD02.0604.B035.L
100	50	30	3+3	21	AS	2	45°	6	Holz-Her-Scm	BFD02.0604.B035.R	BFD02.0604.B035.L
100	50	30	3+3	21	AS	7	45°	6	Scm-Idm-Biesse-Ima-Brandt	BFD02.0604.B035.R	BFD02.0604.B035.L
100	50	30	3+3	21	AS	2	45°	6	Biesse-Idm-Ima-Brandt	BFD02.0604.B035.R	BFD02.0604.B035.L
100	55	30	3+3	24	AS	1	45°	6		BFD02.0604.B035.R	BFD02.0604.B035.L
100	55	30	3+3	24	AS	2	45°	6	Scm-Holz-Her	BFD02.0604.B035.R	BFD02.0604.B035.L
100	55	30	3+3	24	AS	7	45°	6	Biesse-Idm-Ima-Brandt	BFD02.0604.B035.R	BFD02.0604.B035.L
100	65	30	3+3	30	AS	1	45°	6		BFD02.0604.B035.R	BFD02.0604.B035.L
100	65	30	3+3	30	S	3	45°	6	Biesse Akron	BFD02.0604.B035.R	BFD02.0604.B035.L
100	65	30	3+3	30	AS	7	45°	6	Scm-Idm-Biesse-Ima-Brandt	BFD02.0604.B035.R	BFD02.0604.B035.L
100	65	30	3+3	30	AS	2	45°	6	Scm Holz-Her	BFD02.0604.B035.R	BFD02.0604.B035.L
100	65	20	3+3	30	AS	2	45°	6	Cheisa	BFD02.0604.B035.R	BFD02.0604.B035.L
100	65	30	3+3	30	AS	2	45°	6	Holz-Her	BFD02.0604.B035.R	BFD02.0604.B035.L
100	65	30	3+3	30	S	2	45°	6	Holz-Her	BFD02.0604.B035.R	BFD02.0604.B035.L
125	35	30	3+3	12	AS	1	45°	6	Ima-Homag	BFD02.0604.B035.R	BFD02.0604.B035.L
125	45	30	3+3	18	AS	6	45°	6		BFD02.0604.B035.R	BFD02.0604.B035.L
125	45	30	3+3	18	AS	1	45°	6	Ima	BFD02.0604.B035.R	BFD02.0604.B035.L
125	45	30	3+3	18	AS	7	45°	6	Homag	BFD02.0604.B035.R	BFD02.0604.B035.L
125	50	30	3+3	18	AS	1	45°	6		BFD02.0604.B035.R	BFD02.0604.B035.L
125	50	30	3+3	18	AS	2	45°	6	Homag	BFD02.0604.B035.R	BFD02.0604.B035.L
125	65	30	3+3	24	AS	1	45°	6		BFD02.0604.B035.R	BFD02.0604.B035.L
125	65	30	3+3	24	AS	2	45°	6	Biesse	BFD02.0604.B035.R	BFD02.0604.B035.L
125	65	30	3+3	24	AS	7	45°	6	Biesse-Scm-Ima-Brandt	BFD02.0604.B035.R	BFD02.0604.B035.L
125	65	30	3+3	24	AS	2	45°	6	Homag	BFD02.0604.B035.R	BFD02.0604.B035.L
125	65	30	3+3	24	AS	2	45°	6	Holz-Her-Griggio	BFD02.0604.B035.R	BFD02.0604.B035.L
150	45	30	3+3	18	AS	2	45°	6	Homag	BFD02.0604.B035.R	BFD02.0604.B035.L
150	65	30	3+3	24	AS	2	45°	6	Homag	BFD02.0604.B035.R	BFD02.0604.B035.L
125	35	30	4+4	20	AS	1	45°	6	Ima-Homag	BFD03.1254.B035.R	BFD03.1254.B035.L
125	45	30	4+4	28	AS	6	45°	6		BFD03.1254.B035.R	BFD03.1254.B035.L
125	45	30	4+4	28	AS	1	45°	6	Ima	BFD03.1254.B035.R	BFD03.1254.B035.L
125	45	30	4+4	28	AS	7	45°	6	Homag	BFD03.1254.B035.R	BFD03.1254.B035.L
125	50	30	4+4	28	AS	1	45°	6		BFD03.1254.B035.R	BFD03.1254.B035.L
125	50	30	4+4	28	AS	2	45°	6	Homag	BFD03.1254.B035.R	BFD03.1254.B035.L
125	65	30	4+4	40	AS	1	45°	6		BFD03.1254.B035.R	BFD03.1254.B035.L
125	65	30	4+4	40	AS	2	45°	6	Biesse	BFD03.1254.B035.R	BFD03.1254.B035.L
125	65	30	4+4	40	AS	7	45°	6	Biesse-Scm-Ima-Brandt	BFD03.1254.B035.R	BFD03.1254.B035.L

FRESA BORDATRICE FISSA ASSIALITÀ 45° - H6

JOINTING CUTTERS IN DIAMOND WITH ELICOIDAL AXIAL 45° - H6

D	S	F	Z	Z.TOT	S/AS	TYPE	AXIAL	H	MACHINE	CODE RH	CODE LH
125	65	30	4+4	40	AS	2	45°	6	Homag	BFD03.1254.B035.R	BFD03.1254.B035.L
125	65	30	4+4	40	AS	2	45°	6	Holz-Her-Griggio	BFD03.1254.B035.R	BFD03.1254.B035.L
150	45	30	4+4	30	AS	2	45°	6	Homag	BFD03.1254.B035.R	BFD03.1254.B035.L
150	65	30	4+4	40	AS	2	45°	6	Homag	BFD03.1254.B035.R	BFD03.1254.B035.L
180	45	35	4+4	30	AS	2	45°	6	Homag	BFD03.1254.B035.R	BFD03.1254.B035.L
180	65	35	4+4	40	AS	2	45°	6	Homag	BFD03.1254.B035.R	BFD03.1254.B035.L

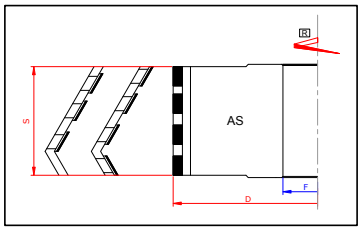

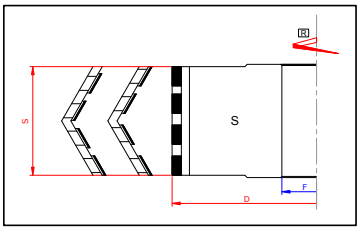

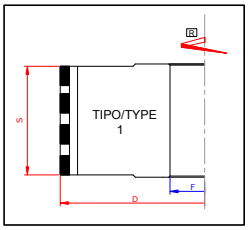

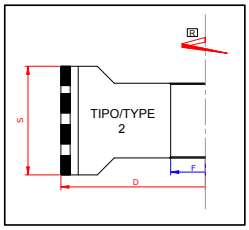

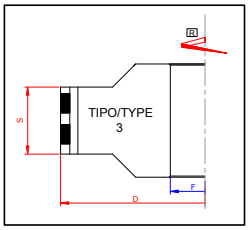

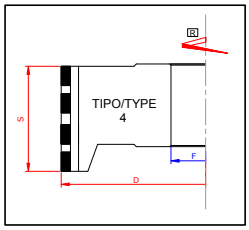

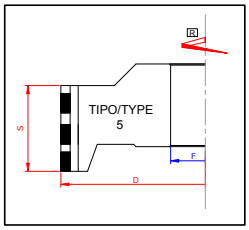

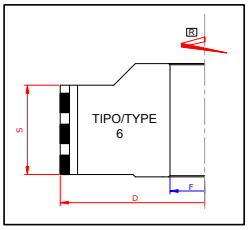

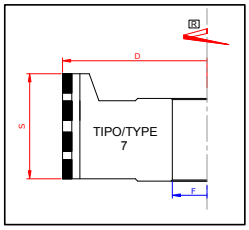

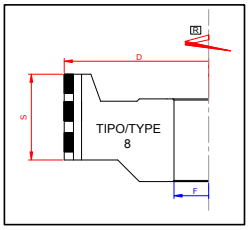

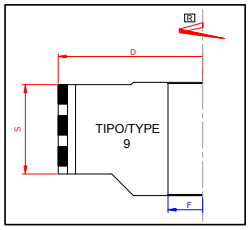

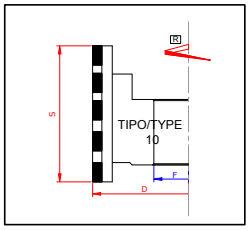

FRESA BORDATRICE FISSA ASSIALITÀ 54° - H4

JOINTING CUTTERS IN DIAMOND WITH ELICOIDAL AXIAL 54° - H4

- FRESA A FINIRE FISSA PER BORDATRICI, ADATTA PER LAVORAZIONI DI PANNELLI NOBILITATI, TRUCIOLARI, RIVESTITI, IMPIALLACCIATI, LAMINATI, M.D.F., OTTIMA FINITURA, BASSA RUMOROSITÀ.
- *JOINTING CUTTERS IN DIAMOND FOR EDGE BANDING MACHINERY, SUITABLE FOR WORKING COATED, CHIPBOARD PANELS, VENEERED, LAMINATED, M.D.F. EXCELLENT FINISHING, LOW NOISINESS.*

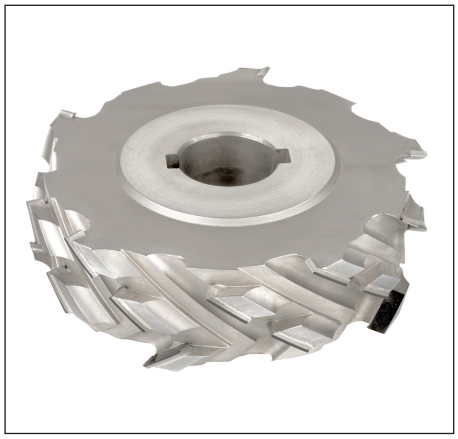

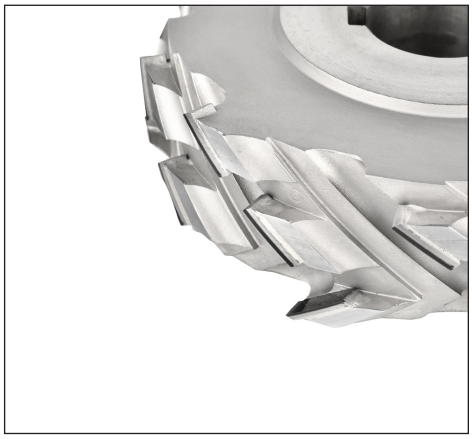

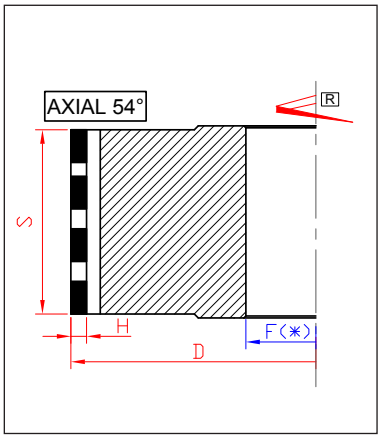

● = ready in stock ■ = delivery time 20 working day ▲ = on request

D	S	F	Z	Z.TOT	S/AS	TYPE	AXIAL	H	MACHINE	CODE RH	CODE LH
100	35	30	3+3	15	AS	1	54°	4	Ima-Brandt	■ BFD02.0100.A035.R	■ BFD02.0100.A035.L
100	45	30	3+3	21	AS	1	54°	4		■ BFD02.0100.A045.R	■ BFD02.0100.A045.L
100	45	30	3+3	21	S	1	54°	4		■ BFD02.0100.A045.R	■ BFD02.0100.A045.L
100	45	30	3+3	21	AS	7	54°	4	Brandt	■ BFD02.0100.A045.R	■ BFD02.0100.A045.L
100	45	30	3+3	21	AS	6	54°	4	Brandt-Ebm-Hebrock	■ BFD02.0100.A035.R	■ BFD02.0100.A035.L
100	45	30	3+3	21	AS	3	54°	4		■ BFD02.0100.A035.R	■ BFD02.0100.A035.L
100	50	30	3+3	21	AS	1	54°	4		■ BFD02.0100.A035.R	■ BFD02.0100.A035.L
100	50	30	3+3	21	AS	2	54°	4	Holz-Her-Scm	■ BFD02.0100.A035.R	■ BFD02.0100.A035.L
100	50	30	3+3	21	AS	7	54°	4	Scm-Idm-Biesse-Ima-Brandt	■ BFD02.0100.A035.R	■ BFD02.0100.A035.L
100	50	30	3+3	21	AS	2	54°	4	Biesse-Idm-Ima-Brandt	■ BFD02.0100.A035.R	■ BFD02.0100.A035.L
100	55	30	3+3	24	AS	1	54°	4		■ BFD02.0100.A035.R	■ BFD02.0100.A035.L
100	55	30	3+3	24	AS	2	54°	4	Scm-Holz-Her	■ BFD02.0100.A035.R	■ BFD02.0100.A035.L
100	55	30	3+3	24	AS	7	54°	4	Biesse-Idm-Ima-Brandt	■ BFD02.0100.A035.R	■ BFD02.0100.A035.L
100	65	30	3+3	24	AS	1	54°	4		■ BFD02.0100.A035.R	■ BFD02.0100.A035.L
100	65	30	3+3	30	S	3	54°	4	Biesse Akron	■ BFD02.0100.A035.R	■ BFD02.0100.A035.L
100	65	30	3+3	30	AS	7	54°	4	Scm-Idm-Biesse-Ima-Brandt	■ BFD02.0100.A035.R	■ BFD02.0100.A035.L
100	65	30	3+3	30	AS	2	54°	4	Scm Holz-Her	■ BFD02.0100.A035.R	■ BFD02.0100.A035.L
100	65	20	3+3	30	AS	2	54	4	Cheisa	■ BFD02.0100.A035.R	■ BFD02.0100.A035.L
100	65	30	3+3	30	AS	2	54°	4	Holz-Her	■ BFD02.0100.A035.R	■ BFD02.0100.A035.L
100	65	30	3+3	30	S	2	54°	4	Holz-Her	■ BFD02.0100.A035.R	■ BFD02.0100.A035.L
125	35	30	3+3	15	AS	1	54°	4	Ima-Homag	■ BFD02.0100.A035.R	■ BFD02.0100.A035.L
125	45	30	3+3	21	AS	6	54°	4		■ BFD02.0100.A035.R	■ BFD02.0100.A035.L
125	45	30	3+3	21	AS	1	54°	4	Ima	■ BFD02.0100.A035.R	■ BFD02.0100.A035.L
125	45	30	3+3	21	AS	7	54	4	Homag	■ BFD02.0100.A035.R	■ BFD02.0100.A035.L
125	50	30	3+3	21	AS	1	54°	4		■ BFD02.0100.A035.R	■ BFD02.0100.A035.L

FRESA BORDATRICE FISSA ASSIALITÀ 54° - H4
JOINTING CUTTERS IN DIAMOND WITH ELICOIDAL AXIAL 54° - H4

D	S	F	Z	Z.TOT	S/AS	TYPE	AXIAL	H	MACHINE	CODE RH	CODE LH
125	50	30	3+3	21	AS	2	54°	4	Homag	■ BFD02.0100.A035.R	■ BFD02.0100.A035.L
125	65	30	3+3	30	AS	1	54°	4		■ BFD02.0100.A035.R	■ BFD02.0100.A035.L
125	65	30	3+3	30	AS	2	54°	4	Biesse	■ BFD02.0100.A035.R	■ BFD02.0100.A035.L
125	65	30	3+3	30	AS	7	54°	4	Biesse-Scm-Ima-Brandt	■ BFD02.0100.A035.R	■ BFD02.0100.A035.L
125	65	30	3+3	30	AS	2	54	4	Homag	■ BFD02.0100.A035.R	■ BFD02.0100.A035.L
125	65	30	3+3	30	AS	2	54°	4	Holz-Her-Griggio	■ BFD02.0100.A035.R	■ BFD02.0100.A035.L
150	45	30	3+3	21	AS	2	54°	4	Homag	■ BFD02.0100.A035.R	■ BFD02.0100.A035.L
150	65	30	3+3	30	AS	2	54°	4	Homag	■ BFD02.0100.A035.R	■ BFD02.0100.A035.L
125	35	30	4+4	21	AS	1	54°	4	Ima-Homag	■ BFD03.0125.A035.R	■ BFD03.0125.A035.L
125	45	30	4+4	28	AS	6	54°	4		■ BFD03.0125.A035.R	■ BFD03.0125.A035.L
125	45	30	4+4	28	AS	1	54°	4	Ima	■ BFD03.0125.A035.R	■ BFD03.0125.A035.L
125	45	30	4+4	28	AS	7	54°	4	Homag	■ BFD03.0125.A035.R	■ BFD03.0125.A035.L
125	50	30	4+4	28	AS	1	54°	4		■ BFD03.0125.A035.R	■ BFD03.0125.A035.L
125	50	30	4+4	28	AS	2	54°	4	Homag	■ BFD03.0125.A035.R	■ BFD03.0125.A035.L
125	65	30	4+4	40	AS	1	54°	4		■ BFD03.0125.A035.R	■ BFD03.0125.A035.L
125	65	30	4+4	40	AS	2	54°	4	Biesse	■ BFD03.0125.A035.R	■ BFD03.0125.A035.L
125	65	30	4+4	40	AS	7	54°	4	Biesse-Scm-Ima-Brandt	■ BFD03.0125.A035.R	■ BFD03.0125.A035.L
125	65	30	4+4	40	AS	2	54°	4	Homag	■ BFD03.0125.A035.R	■ BFD03.0125.A035.L
125	65	30	4+4	40	AS	2	54°	4	Holz-Her-Griggio	■ BFD03.0125.A035.R	■ BFD03.0125.A035.L
150	45	30	4+4	30	AS	2	54°	4	Homag	■ BFD03.0125.A035.R	■ BFD03.0125.A035.L
150	65	30	4+4	40	AS	2	54	4	Homag	■ BFD03.0125.A035.R	■ BFD03.0125.A035.L
125	35	30	5+5	26	AS	1	54°	4	Ima-Homag	■ BFD04.0125.A035.R	■ BFD04.0125.A035.L
125	45	30	5+5	35	AS	6	54°	4		■ BFD04.0125.A035.R	■ BFD04.0125.A035.L
125	45	30	5+5	35	AS	1	54°	4	Ima	■ BFD04.0125.A035.R	■ BFD04.0125.A035.L
125	45	30	5+5	35	AS	7	54°	4	Homag	■ BFD04.0125.A035.R	■ BFD04.0125.A035.L
125	50	30	5+5	35	AS	1	54°	4		■ BFD04.0125.A035.R	■ BFD04.0125.A035.L
125	50	30	5+5	35	AS	2	54°	4	Homag	■ BFD04.0125.A035.R	■ BFD04.0125.A035.L
125	65	30	5+5	50	AS	1	54°	4		■ BFD04.0125.A035.R	■ BFD04.0125.A035.L
125	65	30	5+5	50	AS	2	54°	4	Biesse	■ BFD04.0125.A035.R	■ BFD04.0125.A035.L
125	65	30	5+5	50	AS	7	54°	4	Biesse-Scm-Ima-Brandt	■ BFD04.0125.A035.R	■ BFD04.0125.A035.L
125	65	30	5+5	50	AS	2	54°	4	Homag	■ BFD04.0125.A035.R	■ BFD04.0125.A035.L
125	65	30	5+5	50	AS	2	54°	4	Holz-Her-Griggio	■ BFD04.0125.A035.R	■ BFD04.0125.A035.L
150	45	30	5+5	35	AS	2	54°	4	Homag	■ BFD04.0125.A035.R	■ BFD04.0125.A035.L
150	65	30	5+5	50	AS	2	54°	4	Homag	■ BFD04.0125.A035.R	■ BFD04.0125.A035.L
180	45	30	5+5	35	AS	2	54°	4	Homag	■ BFD04.0125.A035.R	■ BFD04.0125.A035.L
180	65	30	5+5	50	AS	2	54°	4	Homag	■ BFD04.0125.A035.R	■ BFD04.0125.A035.L

FRESA BORDATRICE FISSA ASSIALITÀ 54° - H4

JOINTING CUTTERS IN DIAMOND WITH ELICOIDAL AXIAL 54° - H4

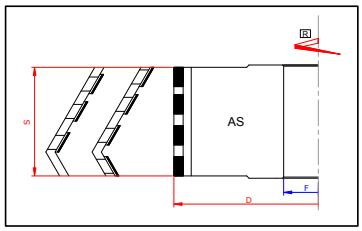

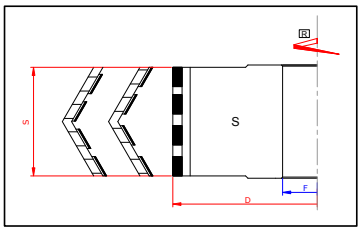

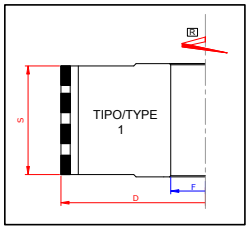

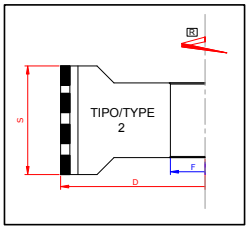

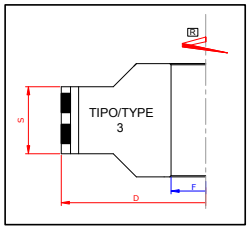

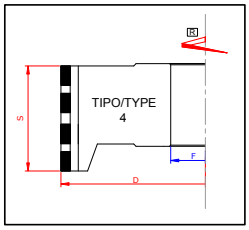

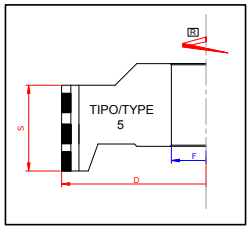

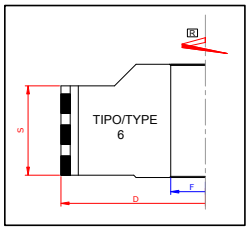

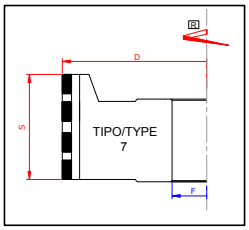

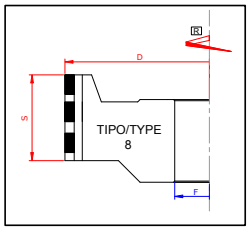

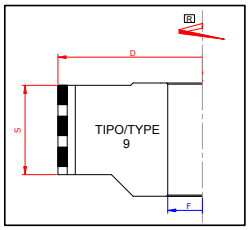

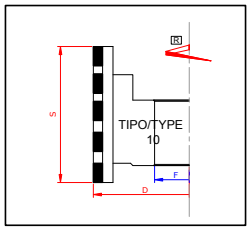

FRESA BORDATRICE FISSA ASSIALITÀ 54° - H6

JOINTING CUTTERS IN DIAMOND WITH ELICOIDAL AXIAL 54° - H6

- FRESA A FINIRE FISSA PER BORDATRICI, ADATTA PER LAVORAZIONI DI PANNELLI NOBILITATI, TRUCIOLARI, RIVESTITI, IMPIALLACCIATI, LAMINATI, M.D.F., OTTIMA FINITURA, BASSA RUMOROSITÀ.
- *JOINTING CUTTERS IN DIAMOND FOR EDGE BANDING MACHINERY, SUITABLE FOR WORKING COATED, CHIPBOARD PANELS, VENEERED, LAMINATED, M.D.F. EXCELLENT FINISHING, LOW NOISINESS.*

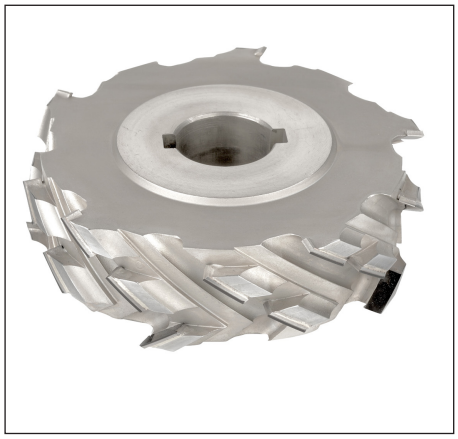

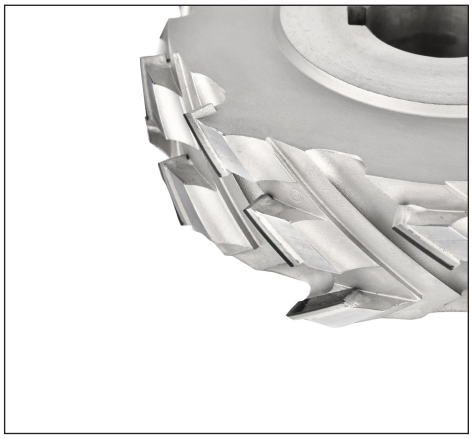

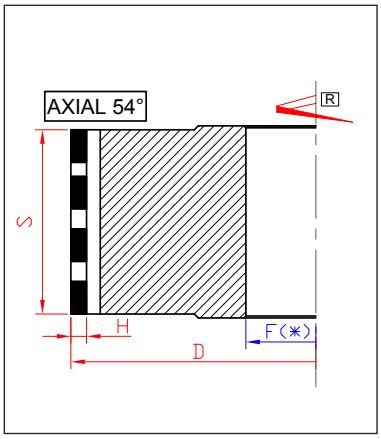

● = ready in stock ■ = delivery time 20 working day ▲ = on request

D	S	F	Z	Z.TOT	S/AS	TYPE	AXIAL	H	MACHINE	CODE RH	CODE LH
100	35	30	3+3	15	AS	1	54°	6	Ima-Brandt	■ BFD02.0100.A035.R	■ BFD02.0100.A035.L
100	45	30	3+3	21	AS	1	54°	6		■ BFD02.0100.A045.R	■ BFD02.0100.A045.L
100	45	30	3+3	21	S	1	54°	6		■ BFD02.0100.A045.R	■ BFD02.0100.A045.L
100	45	30	3+3	21	AS	7	54°	6	Brandt	■ BFD02.0100.A045.R	■ BFD02.0100.A045.L
100	45	30	3+3	21	AS	6	54°	6	Brandt-Ebm-Hebrock	■ BFD02.0100.A035.R	■ BFD02.0100.A035.L
100	45	30	3+3	21	AS	3	54°	6		■ BFD02.0100.A035.R	■ BFD02.0100.A035.L
100	50	30	3+3	21	AS	1	54°	6		■ BFD02.0100.A035.R	■ BFD02.0100.A035.L
100	50	30	3+3	21	AS	2	54°	6	Holz-Her-Scm	■ BFD02.0100.A035.R	■ BFD02.0100.A035.L
100	50	30	3+3	21	AS	7	54°	6	Scm-Idm-Biesse-Ima-Brandt	■ BFD02.0100.A035.R	■ BFD02.0100.A035.L
100	50	30	3+3	21	AS	2	54°	6	Biesse-Idm-Ima-Brandt	■ BFD02.0100.A035.R	■ BFD02.0100.A035.L
100	55	30	3+3	24	AS	1	54°	6		■ BFD02.0100.A035.R	■ BFD02.0100.A035.L
100	55	30	3+3	24	AS	2	54°	6	Scm-Holz-Her	■ BFD02.0100.A035.R	■ BFD02.0100.A035.L
100	55	30	3+3	24	AS	7	54°	6	Biesse-Idm-Ima-Brandt	■ BFD02.0100.A035.R	■ BFD02.0100.A035.L
100	65	30	3+3	24	AS	1	54°	6		■ BFD02.0100.A035.R	■ BFD02.0100.A035.L
100	65	30	3+3	30	S	3	54°	6	Biesse Akron	■ BFD02.0100.A035.R	■ BFD02.0100.A035.L
100	65	30	3+3	30	AS	7	54°	6	Scm-Idm-Biesse-Ima-Brandt	■ BFD02.0100.A035.R	■ BFD02.0100.A035.L
100	65	30	3+3	30	AS	2	54°	6	Scm Holz-Her	■ BFD02.0100.A035.R	■ BFD02.0100.A035.L
100	65	20	3+3	30	AS	2	54	6	Cheisa	■ BFD02.0100.A035.R	■ BFD02.0100.A035.L
100	65	30	3+3	30	AS	2	54°	6	Holz-Her	■ BFD02.0100.A035.R	■ BFD02.0100.A035.L
100	65	30	3+3	30	S	2	54°	6	Holz-Her	■ BFD02.0100.A035.R	■ BFD02.0100.A035.L
125	35	30	3+3	15	AS	1	54°	6	Ima-Homag	■ BFD02.0100.A035.R	■ BFD02.0100.A035.L
125	45	30	3+3	21	AS	6	54°	6		■ BFD02.0100.A035.R	■ BFD02.0100.A035.L
125	45	30	3+3	21	AS	1	54°	6	Ima	■ BFD02.0100.A035.R	■ BFD02.0100.A035.L
125	45	30	3+3	21	AS	7	54	6	Homag	■ BFD02.0100.A035.R	■ BFD02.0100.A035.L
125	50	30	3+3	21	AS	1	54°	6		■ BFD02.0100.A035.R	■ BFD02.0100.A035.L

DORIGO UTENSILI
DIAMOND & HARD METAL TOOLS

FRESA BORDATRICE FISSA ASSIALITÀ 54° - H6
JOINTING CUTTERS IN DIAMOND WITH ELICOIDAL AXIAL 54° - H6

D	S	F	Z	Z.TOT	S/AS	TYPE	AXIAL	H	MACHINE	CODE RH	CODE LH
125	50	30	3+3	21	AS	2	54°	6	Homag	■ BFD02.0100.A035.R	■ BFD02.0100.A035.L
125	65	30	3+3	30	AS	1	54°	6		■ BFD02.0100.A035.R	■ BFD02.0100.A035.L
125	65	30	3+3	30	AS	2	54°	6	Biesse	■ BFD02.0100.A035.R	■ BFD02.0100.A035.L
125	65	30	3+3	30	AS	7	54°	6	Biesse-Scm-Ima-Brandt	■ BFD02.0100.A035.R	■ BFD02.0100.A035.L
125	65	30	3+3	30	AS	2	54	6	Homag	■ BFD02.0100.A035.R	■ BFD02.0100.A035.L
125	65	30	3+3	30	AS	2	54°	6	Holz-Her-Griggio	■ BFD02.0100.A035.R	■ BFD02.0100.A035.L
150	45	30	3+3	21	AS	2	54°	6	Homag	■ BFD02.0100.A035.R	■ BFD02.0100.A035.L
150	65	30	3+3	30	AS	2	54°	6	Homag	■ BFD02.0100.A035.R	■ BFD02.0100.A035.L
125	35	30	4+4	21	AS	1	54°	6	Ima-Homag	■ BFD03.0125.A035.R	■ BFD03.0125.A035.L
125	45	30	4+4	28	AS	6	54°	6		■ BFD03.0125.A035.R	■ BFD03.0125.A035.L
125	45	30	4+4	28	AS	1	54°	6	Ima	■ BFD03.0125.A035.R	■ BFD03.0125.A035.L
125	45	30	4+4	28	AS	7	54°	6	Homag	■ BFD03.0125.A035.R	■ BFD03.0125.A035.L
125	50	30	4+4	28	AS	1	54°	6		■ BFD03.0125.A035.R	■ BFD03.0125.A035.L
125	50	30	4+4	28	AS	2	54°	6	Homag	■ BFD03.0125.A035.R	■ BFD03.0125.A035.L
125	65	30	4+4	40	AS	1	54°	6		■ BFD03.0125.A035.R	■ BFD03.0125.A035.L
125	65	30	4+4	40	AS	2	54°	6	Biesse	■ BFD03.0125.A035.R	■ BFD03.0125.A035.L
125	65	30	4+4	40	AS	7	54°	6	Biesse-Scm-Ima-Brandt	■ BFD03.0125.A035.R	■ BFD03.0125.A035.L
125	65	30	4+4	40	AS	2	54°	6	Homag	■ BFD03.0125.A035.R	■ BFD03.0125.A035.L
125	65	30	4+4	40	AS	2	54°	6	Holz-Her-Griggio	■ BFD03.0125.A035.R	■ BFD03.0125.A035.L
150	45	30	4+4	30	AS	2	54°	6	Homag	■ BFD03.0125.A035.R	■ BFD03.0125.A035.L
150	65	30	4+4	40	AS	2	54	6	Homag	■ BFD03.0125.A035.R	■ BFD03.0125.A035.L
125	35	30	5+5	26	AS	1	54°	6	Ima-Homag	■ BFD04.0125.A035.R	■ BFD04.0125.A035.L
125	45	30	5+5	35	AS	6	54°	6		■ BFD04.0125.A035.R	■ BFD04.0125.A035.L
125	45	30	5+5	35	AS	1	54°	6	Ima	■ BFD04.0125.A035.R	■ BFD04.0125.A035.L
125	45	30	5+5	35	AS	7	54°	6	Homag	■ BFD04.0125.A035.R	■ BFD04.0125.A035.L
125	50	30	5+5	35	AS	1	54°	6		■ BFD04.0125.A035.R	■ BFD04.0125.A035.L
125	50	30	5+5	35	AS	2	54°	6	Homag	■ BFD04.0125.A035.R	■ BFD04.0125.A035.L
125	65	30	5+5	50	AS	1	54°	6		■ BFD04.0125.A035.R	■ BFD04.0125.A035.L
125	65	30	5+5	50	AS	2	54°	6	Biesse	■ BFD04.0125.A035.R	■ BFD04.0125.A035.L
125	65	30	5+5	50	AS	7	54°	6	Biesse-Scm-Ima-Brandt	■ BFD04.0125.A035.R	■ BFD04.0125.A035.L
125	65	30	5+5	50	AS	2	54°	6	Homag	■ BFD04.0125.A035.R	■ BFD04.0125.A035.L
125	65	30	5+5	50	AS	2	54°	6	Holz-Her-Griggio	■ BFD04.0125.A035.R	■ BFD04.0125.A035.L
150	45	30	5+5	35	AS	2	54°	6	Homag	■ BFD04.0125.A035.R	■ BFD04.0125.A035.L
150	65	30	5+5	50	AS	2	54°	6	Homag	■ BFD04.0125.A035.R	■ BFD04.0125.A035.L
180	45	30	5+5	35	AS	2	54°	6	Homag	■ BFD04.0125.A035.R	■ BFD04.0125.A035.L
180	65	30	5+5	50	AS	2	54°	6	Homag	■ BFD04.0125.A035.R	■ BFD04.0125.A035.L

FRESA BORDATRICE FISSA ASSIALITÀ 54° - H6

JOINTING CUTTERS IN DIAMOND WITH ELICOIDAL AXIAL 54° - H6

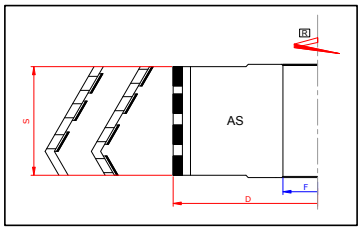

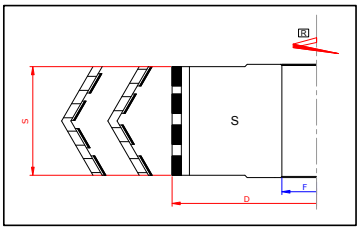

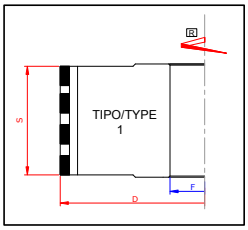

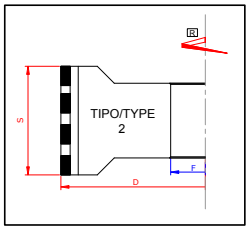

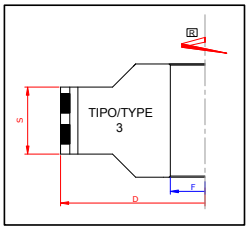

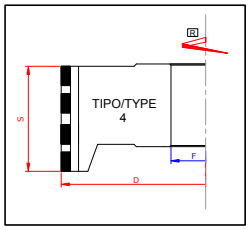

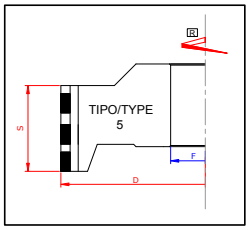

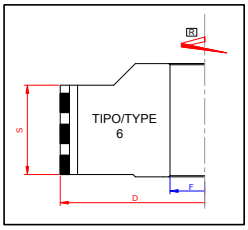

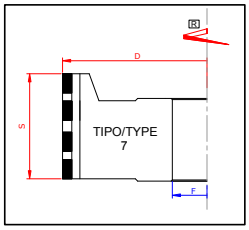

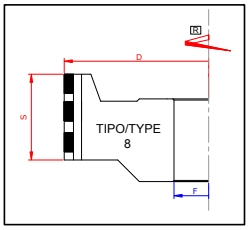

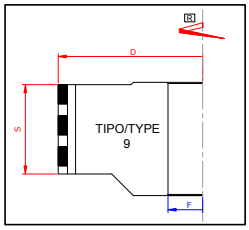

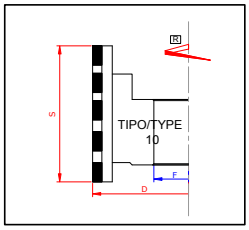

FRESA BORDATRICE IN ALLUMINIO CON INSERTI IN DIAMANTE ASSIALITÀ 30° - H 2,5
JOINTING CUTTERS IN DIAMOND IN ALLUMINIUM WITH INSERTS AXIAL 30° - H 2,5

- FRESA A FINIRE FISSA PER BORDATRICE CON CORPO IN ALLUMINIO AD INSERTI IN DIAMANTE, ADATTA PER LAVORAZIONI DI PANNELLI NOBILITATI, TRUCIOLARI, RIVESTITI, IMPIALLACCIATI, LAMINATI, M.D.F. , OTTIMA FINITURA, BASSA RUMOROSITÀ.
- *JOINTING CUTTERS BODY IN ALLUMINIUM WITH KNIFE IN DIAMOND FOR EDGEBANDING MACHINERY, SUITABLE FOR WORKING COATED, CHIPBOARD PANELS, VENEERED, LAMINATED, M.D.F.EXCELLENT FINISHING, LOW NOISINESS.*

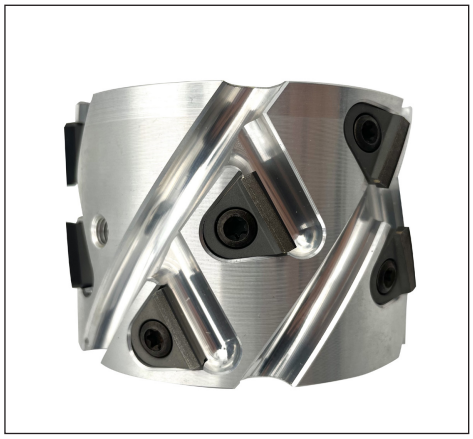

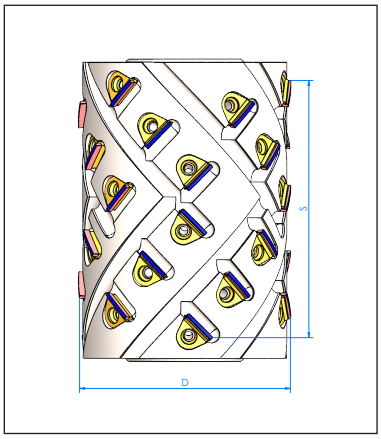

● = ready in stock ■ = delivery time 20 working day ▲ = on request

D	S	F	Z	Z.TOT	S/AS	TYPE	AXIAL	H	MACHINE	CODE RH	CODE LH
60	34	20	2+2	6	AS	1	30°	2,5	Cheisa	■ BXD.4041001R	■ BXD.4041002L
60	34	20	3+3	9	AS	1	30°	2,5	Cheisa	■ BXD.4041003R	■ BXD.4041004L
60	44	25	2+2	8	AS	1	30°	2,5	Fravol-Felder	■ BXD.4041005R	■ BXD.4041006L
60	44	25	3+3	12	AS	1	30°	2,5	Fravol-Felder	■ BXD.4041007R	■ BXD.4041008L
60	55	20	2+2	10	AS	1	30°	2,5		■ BXD.4041009R	■ BXD.4041010L
60	55	20	3+3	15	AS	1	30°	2,5		■ BXD.4041011R	■ BXD.4041012L
60	55	25	2+2	10	AS	1	30°	2,5		■ BXD.4041013R	■ BXD.4041014L
60	55	25	3+3	15	AS	1	30°	2,5		■ BXD.4041015R	■ BXD.4041016L
60	55	16	2+2	10	S	2	30°	2,5		■ BXD.4041017R	■ BXD4041018L
60	55	16	3+3	15	S	2	30°	2,5		■ BXD.4041019R	■ BXD.4041020L
60	55	20	2+2	10	AS	2	30°	2,5	Cheisa	■ BXD.4041021R	■ BXD.4041022L
60	55	20	3+3	15	AS	2	30°	2,5	Cheisa	■ BXD.4041023R	■ BXD.4041024L
60	55	25	2+2	10	AS	2	30°	2,5	Casadei	■ BXD.4041025R	■ BXD.4041026L
60	55	25	3+3	12	AS	2	30°	2,5	Casadei	■ BXD.4041027R	■ BXD.4041028L
60	65	20	2+2	12	AS	1	30°	2,5		■ BXD.4041029R	■ BXD.4041030L
60	65	20	3+3	18	AS	1	30°	2,5		■ BXD.4041031R	■ BXD.4041032L
60	65	25	2+2	12	AS	1	30°	2,5	Felder-Format4 - Fravol	■ BXD.4041033R	■ BXD.4041034L
60	65	25	3+3	18	AS	1	30°	2,5	Felder-Format4 - Fravol	■ BXD.4041035R	■ BXD.4041036L
60	65	25	2+2	12	AS	2	30°	2,5	Fravol	■ BXD.4041037R	■ BXD.4041038L
60	65	25	3+3	18	AS	2	30	2,5	Fravol	■ BXD.4041039R	■ BXD.4041040R
70	44	30	2+2	8	AS	6	30°	2,5		■ BXD.4041041R	■ BXD.4041042L
70	44	30	3+3	12	AS	6	30°	2,5		■ BXD.4041043R	■ BXD.4041044L
70	44	30	2+2	8	AS	10	30°	2,5	Holz-Her	■ BXD.4041045R	■ BXD.4041046L
70	44	30	3+3	12	AS	10	30°	2,5	Holz-Her	■ BXD.4041045R	■ BXD.4041045L

FRESA BORDATRICE IN ALLUMINIO CON INSERTI IN DIAMANTE ASSIALITÀ 30° - H 2,5

JOINTING CUTTERS IN DIAMOND IN ALLUMINIUM WITH INSERTS AXIAL 30° - H 2,5

D	S	F	Z	Z.TOT	S/AS	TYPE	AXIAL	H	MACHINE	CODE RH	CODE LH
70	44	30	2+2	8	AS	7	30°	2,5		■ BXD.4041049R	■ BXD.4041049L
70	44	30	3+3	12	AS	7	30°	2,5		■ BXD.4041051R	■ BXD.4041052L
70	44	25	2+2	8	AS	1	30°	2,5	Hebrock	■ BXD.4041053R	■ BXD.4041054L
70	44	25	3+3	12	AS	1	30°	2,5	Hebrock	■ BXD.4041055R	■ BXD.4041056L
70	55	30	2+2	10	AS	10	30°	2,5	Holz-Her	■ BXD.4041057R	■ BXD.4041058L
70	55	30	3+3	15	AS	10	30°	2,5	Holz-Her	■ BXD.4041059R	■ BXD.4041060L
70	65	30	2+2	12	AS	10	30°	2,5	Holz-Her Arcus 1801	■ BXD.4041061R	■ BXD.4041062L
70	65	30	3+3	18	AS	10	31°	2,5	Holz-Her Arcus 1801	■ BXD.4041063R	■ BXD.4041064L
80	44	30	2+2	8	AS	1	30°	2,5	Biesse	■ BXD.4041065R	■ BXD.4041066L
80	44	30	3+3	12	AS	1	30°	2,5	Biesse	■ BXD.4041067R	■ BXD.4041068L
80	44	30	2+2	8	S	3	30	2,5	Biesse	■ BXD.4041069R	■ BXD.4041070L
80	44	30	3+3	12	S	3	30°	2,5	Biesse	■ BXD.4041071R	■ BXD.4041072L
80	65	25	2+2	12	AS	2	30°	2,5	Felder Format 4	■ BXD.4041073R	■ BXD.4041074L
80	65	25	3+3	18	AS	2	30°	2,5	Felder Format 4	■ BXD.4041075R	■ BXD.4041076L
100	44	30	2+2	8	AS	1	30°	2,5	Scm-Stefani	■ BXD.4041077R	■ BXD.4041078L
100	44	30	3+3	12	AS	1	30°	2,5	Scm-Stefani	■ BXD.4041079R	■ BXD.4041080L
100	44	30	2+2	8	AS	6	30°	2,5	Helbrock-Ebm	■ BXD.40411081R	■ BXD.4041082L
100	44	30	3+3	12	AS	6	30°	2,5	Helbrock-Ebm	■ BXD.4041083R	■ BXD.4041084L
100	44	30	2+2	8	AS	2	30°	2,5	Holz-Her	■ BXD.4041085R	■ BXD.4041086R
100	44	30	3+3	12	AS	2	30°	2,5	Holz-Her	■ BXD.4041087R	■ BXD.4041088L
100	44	25	2+2	8	AS	7	30°	2,5	Brandt	■ BXD.4041089R	■ BXD.4041090L
100	44	25	3+3	12	AS	7	30°	2,5	Brandt	■ BXD.4041091R	■ BXD.4041092L
100	44	30	2+2	8	AS	7	30°	2,5	Brandt	■ BXD.4041093R	■ BXD.4041094L
100	44	30	3+3	12	AS	7	30°	2,5	Brandt	■ BXD.4041095R	■ BXD.4041096L
100	44	30	3+3	12	S	3	30°	2,5	Biesse	■ BXD.4041097R	■ BXD.4041098L
100	55	30	2+2	10	AS	1	30°	2,5	Scm-Stefani	■ BXD.4041099R	■ BXD.4041100L
100	55	30	3+3	15	AS	1	30°	2,5	Scm-Stefani	■ BXD.4041101R	■ BXD.4041102L
100	65	30	3+3	18	S	1	30°	2,5	Biesse Akron 600/ Biesse Akron 800	■ BXD.4041103R	■ BXD.4041104L
100	65	30	3+3	18	AS	7	30°	2,5	Brandt-Scm	■ BXD.4041105R	■ BXD.4041106L
100	65	30	2+2	12	AS	7	30°	2,5	Fravol	■ BXD.4041107R	■ BXD.4041108L
100	65	30	3+3	18	AS	7	30°	2,5	Fravol	■ BXD.4041109R	■ BXD.4041110L
100	65	30	3+3	18	AS	7	30°	2,5	Holz-Her	■ BXD.4041111R	■ BXD.4041112L
100	65	30	2+2	12	AS	2	30°	2,5	Holz-Her	■ BXD.4041113R	■ BXD.4041114L
100	65	30	2+2	12	AS	8	30°	2,5	Scm-Stefani	■ BXD.4041115R	■ BXD.4041116L
100	65	30	3+3	18	AS	8	30°	2,5	Scm-Stefani	■ BXD.4041117R	■ BXD.4041118L
125	44	30	3+3	12	S	2	30°	2,5	Biesse-Homag	■ BXD.4041119R	■ BXD.4041120L
125	65	30	3+3	18	S	2	30°	2,5	Biesse-Homag	■ BXD.4041121R	■ BXD.4041122L

FRESA BORDATRICE IN ALLUMINIO CON INSERTI IN DIAMANTE ASSIALITÀ 30° - H 2,5

JOINTING CUTTERS IN DIAMOND IN ALLUMINIUM WITH INSERTS AXIAL 30° - H 2,5

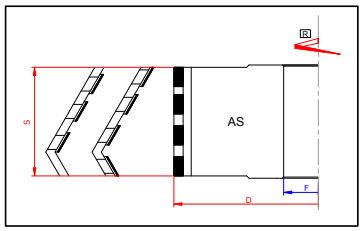

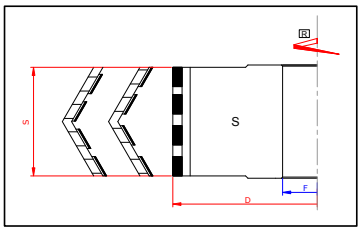

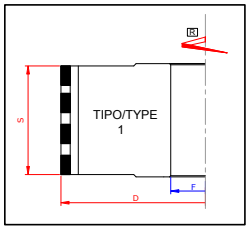

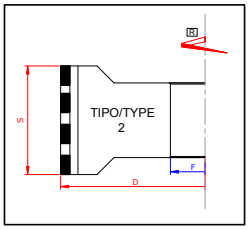

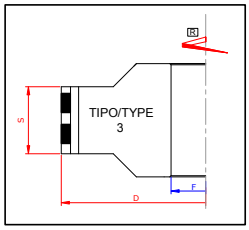

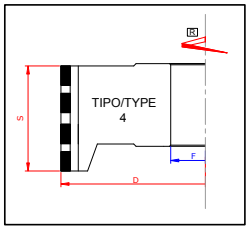

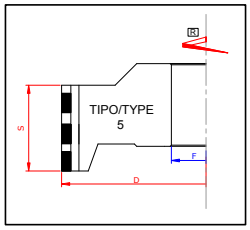

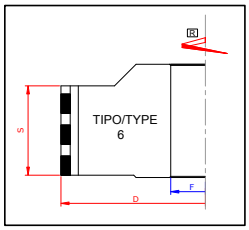

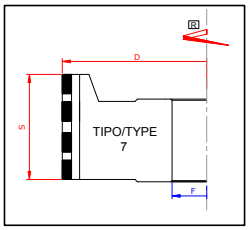

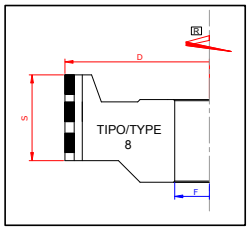

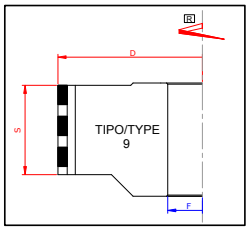

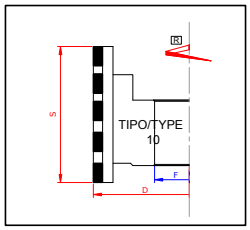

FRESA BORDATRICE IN ALLUMINIO CON INSERTI IN DIAMANTE ASSIALITÀ 45° - H 2,5
JOINTING CUTTERS IN DIAMOND IN ALLUMINIUM WITH INSERTS AXIAL 45° - H 2,5

- FRESA A FINIRE FISSA PER BORDATRICE CON CORPO IN ALLUMINIO AD INSERTI IN DIAMANTE, ADATTA PER LAVORAZIONI DI PANNELLI NOBILITATI, TRUCIOLARI, RIVESTITI, IMPIALLACCIATI, LAMINATI, M.D.F. , OTTIMA FINITURA, BASSA RUMOROSITÀ.
- *JOINTING CUTTERS BODY IN ALLUMINIUM WITH KNIFE IN DIAMOND FOR EDGEBANDING MACHINERY, SUITABLE FOR WORKING COATED, CHIPBOARD PANELS, VENEERED, LAMINATED, M.D.F. EXCELLENT FINISHING, LOW NOISINESS.*

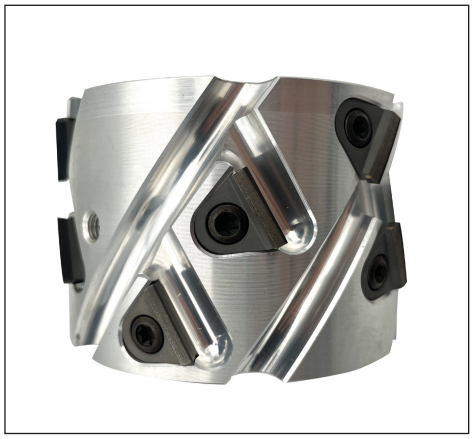

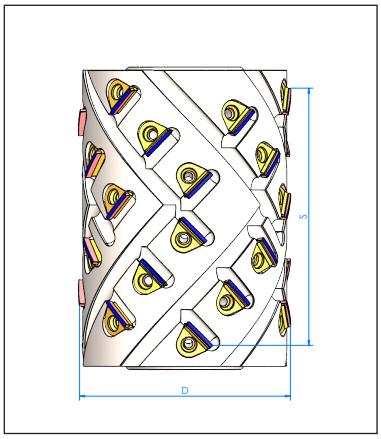

● = ready in stock ■ = delivery time 20 working day ▲ = on request

D	S	F	Z	Z.TOT	S/AS	TYPE	AXIAL	H	MACHINE	CODE RH	CODE LH
100	46	30	2+2	10	AS	2	45°	2,5	Scm-Stefani	■ BXD.4042077R	■ BXD.4042078L
100	46	30	3+3	15	AS	2	45°	2,5	Scm-Stefani	■ BXD.4042079R	■ BXD.4042080L
100	46	30	2+2	10	AS	1	45°	2,5	Helbrock-Ebm	■ BXD.40421081R	■ BXD.4042082L
100	46	30	3+3	15	AS	1	45°	2,5	Helbrock-Ebm	■ BXD.4042083R	■ BXD.4042084L
100	46	30	2+2	10	AS	2	45°	2,5	Holz-Her	■ BXD.4042085R	■ BXD.4042086R
100	46	30	3+3	15	AS	2	45°	2,5	Holz-Her	■ BXD.4042087R	■ BXD.4042088L
100	46	25	2+2	10	AS	7	45°	2,5	Brandt	■ BXD.4042089R	■ BXD.4042090L
100	46	25	3+3	15	AS	7	45°	2,5	Brandt	■ BXD.4042091R	■ BXD.4042092L
100	46	30	2+2	10	AS	7	45°	2,5	Brandt	■ BXD.4042093R	■ BXD.4042094L
100	46	30	3+3	15	AS	7	45°	2,5	Brandt	■ BXD.4042095R	■ BXD.4042096L
100	46	30	3+3	15	S	3	45°	2,5	Biesse	■ BXD.4042097R	■ BXD.4042098L
100	55	30	2+2	10	AS	1	45°	2,5	Scm-Stefani	■ BXD.4042099R	■ BXD.4042100L
100	55	30	3+3	18	AS	1	45°	2,5	Scm-Stefani	■ BXD.4042101R	■ BXD.4042102L
100	64	30	3+3	21	S	2	45°	2,5	Biesse Akron 600/Biesse Akron 800	■ BXD.4042103R	■ BXD.4042104L
100	64	30	3+3	21	AS	7	45°	2,5	Brandt-Scm	■ BXD.4042105R	■ BXD.4042106L
100	64	30	2+2	14	AS	7	45°	2,5	Fravol	■ BXD.4042107R	■ BXD.4042108L
100	64	30	3+3	21	AS	7	45°	2,5	Fravol	■ BXD.4042109R	■ BXD.4042110L
100	64	30	3+3	21	AS	7	45°	2,5	Holz-Her	■ BXD.4042111R	■ BXD.4042112L
100	64	30	2+2	14	AS	2	45°	2,5	Holz-Her	■ BXD.4042113R	■ BXD.4042114L
100	64	30	2+2	14	AS	8	45°	2,5	Scm-Stefani	■ BXD.4042115R	■ BXD.4042116L
100	64	30	3+3	21	AS	8	45°	2,5	Scm-Stefani	■ BXD.4042117R	■ BXD.4042118L
125	46	30	3+3	15	S	2	45°	2,5	Biesse-Homag	■ BXD.4041119R	■ BXD.4042120L
125	64	30	3+3	21	S	2	45°	2,5	Biesse-Homag	■ BXD.4041121R	■ BXD.4042122L

FRESA BORDATRICE IN ALLUMINIO CON INSERTI IN DIAMANTE ASSIALITÀ 45° - H 2,5

JOINTING CUTTERS IN DIAMOND IN ALLUMINIUM WITH INSERTS AXIAL 45° - H 2,5

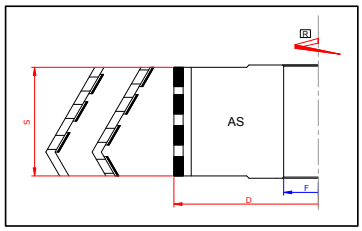

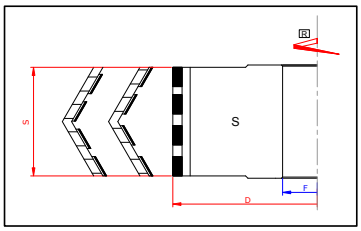

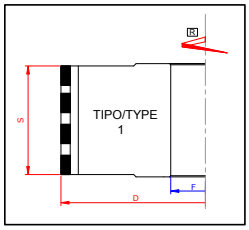

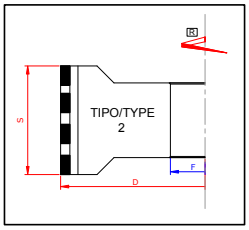

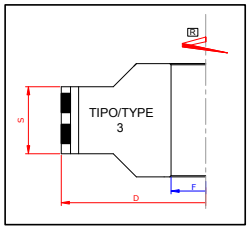

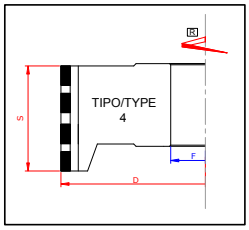

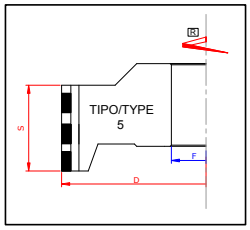

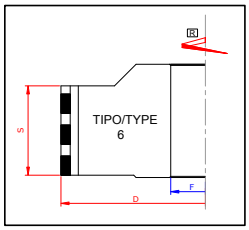

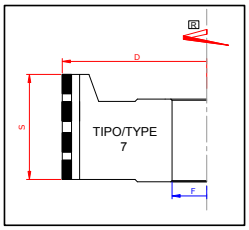

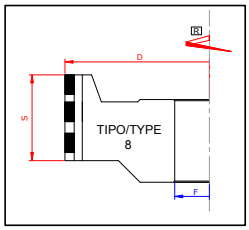

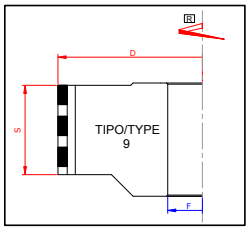

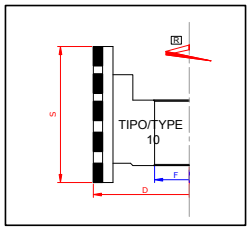

FRESA BORDATRICI IN PCD REGISTRABILI 30° - H4

JOINTING CUTTERS IN DIAMOND WITH ELICOIDAL ADJUSTABLE 30° - H4

- FRESA A FINIRE PER BORDATRICI REGISTRABILI, ADATTA PER LAVORAZIONI DI PANNELLI NOBILITATI, TRUCIOLARI, RIVESTITI, IMPIALLACCIATI, LAMINATI, M.D.F., OTTIMA FINITURA, BASSA RUMOROSITÀ.
- *JOINTING CUTTERS IN DIAMOND FOR EDGE BANDING MACHINERY ADJUSTABLE, SUITABLE FOR WORKING COATED, CHIPBOARD PANELS, VENEERED, LAMINATED, M.D.F. EXCELLENT FINISHING, LOW NOISINESS.*

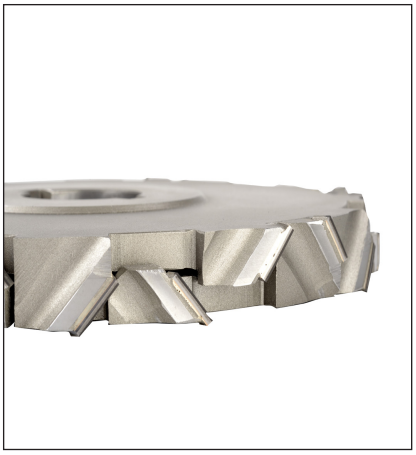

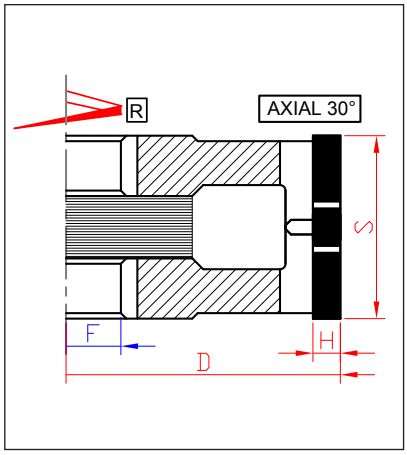

● = ready in stock ■ = delivery time 20 working day ▲ = on request

D	S	F	Z	Z.TOT	AXIAL	H	CODE
80	22/40	30+2	3+3	12	30°	4	■ BRD01.0804.4030R
80	30/58	30+2	3+3	18	30°	4	■ BRD01.0804.5830R
100	22/40	30+2	3+3	12	30°	4	■ BRD01.1004.4030R
100	30/58	30+2	3+3	18	30°	4	■ BRD01.1004.5830R
125	22/40	30+2	3+3	12	30°	4	■ BRD01.1254.4030R
125	30/58	30+2	3+3	18	30°	4	■ BRD01.1254.5830R
180	22/40	35+2	5+5	20	30°	4	■ BRD03.1804.4035R
180	22/40	40+2	5+5	20	30°	4	■ BRD03.1804.4040R
180	22/40	35+2	6+6	24	30°	4	■ BRD04.1804.4035R
180	22/40	40+2	6+6	24	30°	4	■ BRD04.1804.4040R
180	30/58	35+2	5+5	30	30°	4	■ BRD03.1804.5835R
180	30/58	40+2	5+5	30	30°	4	■ BRD03.1804.5835R
180	30/58	35+2	6+6	36	30°	4	■ BRD04.1804.5835R
180	30/58	40+2	6+6	36	30°	4	■ BRD04.1804.5840R
180	22/40	35+2	8+8	32	30°	4	■ BRD05.1804.4035R
180	22/40	40+2	8+8	32	30°	4	■ BRD05.1804.4040R
180	30/58	35+2	8+8	48	30°	4	■ BRD05.1804.5835R
180	30/58	40+2	8+8	48	30°	4	■ BRD05.1804.5840R
200	22/40	35+2	5+5	20	30°	4	■ BRD03.2004.4035R
200	22/40	40+2	5+5	20	30°	4	■ BRD03.2004.4040R
200	22/40	35+2	6+6	24	30°	4	■ BRD04.2004.4035R
200	22/40	40+2	6+6	24	30°	4	■ BRD04.2004.4040R
200	22/40	35+2	8+8	30	30°	4	■ BRD05.2004.4035R
200	22/40	40+2	8+8	30	30°	4	■ BRD05.2004.4040R
200	30/58	35+2	5+5	36	30°	4	■ BRD03.2004.5835R

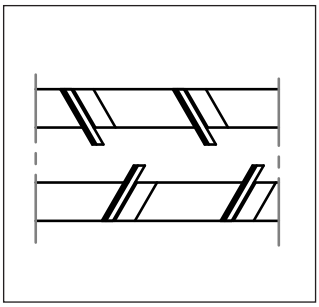

FRESA BORDATRICI IN PCD REGISTRABILI 30° - H4

JOINTING CUTTERS IN DIAMOND WITH ELICOIDAL ADJUSTABLE 30° - H4

D	S	F	Z	Z.TOT	AXIAL	H	CODE
200	30/58	40+2	5+5	36	30°	4	■ BRD03.2004.5840R
200	30/58	35+2	6+6	32	30°	4	■ BRD04.2004.5835R
200	30/58	40+2	6+6	32	30°	4	■ BRD04.2004.5840R
200	30/58	35+2	8+8	48	30°	4	■ BRD05.2004.5835R
200	30/58	40+2	8+8	48	30°	4	■ BRD05.2004.5840R

FRESA BORDATRICI IN PCD REGISTRABILI 30° - H6
JOINTING CUTTERS IN DIAMOND WITH ELICOIDAL ADJUSTABLE 30° - H6

- FRESA A FINIRE PER BORDATRICI REGISTRABILI, ADATTA PER LAVORAZIONI DI PANNELLI NOBILITATI, TRUCIOLARI, RIVESTITI, IMPIALLACCIATI, LAMINATI, M.D.F., OTTIMA FINITURA, BASSA RUMOROSITÀ.
- *JOINTING CUTTERS IN DIAMOND FOR EDGE BANDING MACHINERY ADJUSTABLE, SUITABLE FOR WORKING COATED, CHIPBOARD PANELS, VENEERED, LAMINATED, M.D.F. EXCELLENT FINISHING, LOW NOISINESS.*

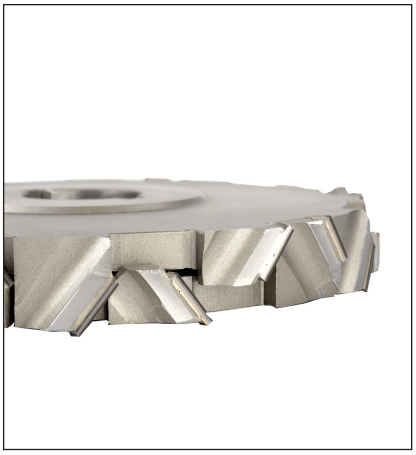

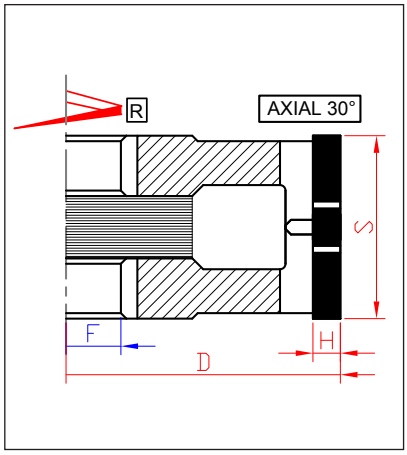

● = ready in stock ■ = delivery time 20 working day ▲ = on request

D	S	F	Z	Z.TOT	AXIAL	H	CODE
80	22/40	30+2	3+3	12	30°	6	■ BRD01.0806.4030R
80	30/58	30+2	3+3	18	30°	6	■ BRD01.0806.5830R
100	22/40	30+2	3+3	12	30°	6	■ BRD01.1006.4030R
100	30/58	30+2	3+3	18	30°	6	■ BRD01.1006.5830R
125	22/40	30+2	3+3	12	30°	6	■ BRD01.1256.4030R
125	30/58	30+2	3+3	18	30°	6	■ BRD01.1256.5830R
180	22/40	35+2	5+5	20	30°	6	■ BRD03.1806.4035R
180	22/40	40+2	5+5	20	30°	6	■ BRD03.1806.4040R
180	22/40	35+2	6+6	24	30°	6	■ BRD04.1806.4035R
180	22/40	40+2	6+6	24	30°	6	■ BRD04.1806.4040R
180	30/58	35+2	5+5	30	30°	6	■ BRD03.1806.5835R
180	30/58	40+2	5+5	30	30°	6	■ BRD03.1806.5835R
180	30/58	35+2	6+6	36	30°	6	■ BRD04.1806.5835R
180	30/58	40+2	6+6	36	30°	6	■ BRD04.1806.5840R
180	22/40	35+2	8+8	32	30°	6	■ BRD05.1806.4035R
180	22/40	40+2	8+8	32	30°	6	■ BRD05.1806.4040R
180	30/58	35+2	8+8	48	30°	6	■ BRD05.1806.5835R
180	30/58	40+2	8+8	48	30°	6	■ BRD05.1806.5840R
200	22/40	35+2	5+5	20	30°	6	■ BRD03.2006.4035R
200	22/40	40+2	5+5	20	30°	6	■ BRD03.2006.4040R
200	22/40	35+2	6+6	24	30°	6	■ BRD04.2006.4035R
200	22/40	40+2	6+6	24	30°	6	■ BRD04.2006.4040R
200	22/40	35+2	8+8	30	30°	6	■ BRD05.2006.4035R
200	22/40	40+2	8+8	30	30°	6	■ BRD05.2006.4040R
200	30/58	35+2	5+5	36	30°	6	■ BRD03.2006.5835R

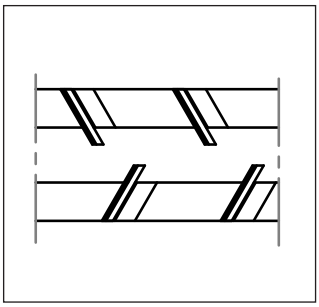

FRESA BORDATRICI IN PCD REGISTRABILI 30° - H6

JOINTING CUTTERS IN DIAMOND WITH ELICOIDAL ADJUSTABLE 30° - H6

D	S	F	Z	Z.TOT	AXIAL	H	CODE
200	30/58	40+2	5+5	36	30°	6	■ BRD03.2006.5840R
200	30/58	35+2	6+6	32	30°	6	■ BRD04.2006.5835R
200	30/58	40+2	6+6	32	30°	6	■ BRD04.2006.5840R
200	30/58	35+2	8+8	48	30°	6	■ BRD05.2006.5835R
200	30/58	40+2	8+8	48	30°	6	■ BRD05.2006.5840R

FRESA BORDATRICI IN PCD REGISTRABILI 45° - H4
JOINTING CUTTERS IN DIAMOND WITH ELICOIDAL ADJUSTABLE 45° - H4

- FRESA A FINIRE PER BORDATRICI REGISTRABILI, ADATTA PER LAVORAZIONI DI PANNELLI NOBILITATI, TRUCIOLARI, RIVESTITI, IMPIALLACCIATI, LAMINATI, M.D.F., OTTIMA FINITURA, BASSA RUMOROSITÀ
- *JOINTING CUTTERS IN DIAMOND FOR EDGE BANDING MACHINERY ADJUSTABLE, SUITABLE FOR WORKING COATED, CHIPBOARD PANELS, VENEERED, LAMINATED, M.D.F. EXCELLENT FINISHING, LOW NOISINESS.*

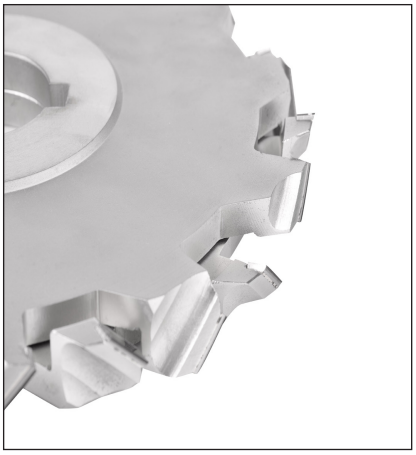

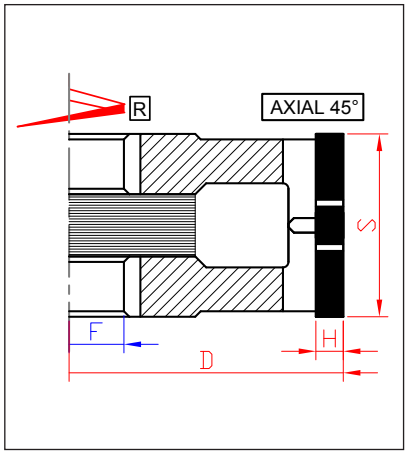

● = ready in stock ■ = delivery time 20 working day ▲ = on request

D	S	F	Z	Z.TOT	AXIAL	H	CODE
80	22/40	30+2	3+3	12	45°	4	■ BRD01.0804.4030R
80	30/58	30+2	3+3	18	45°	4	■ BRD01.0804.5830R
100	22/40	30+2	3+3	12	45°	4	■ BRD01.1004.4030R
100	30/58	30+2	3+3	18	45°	4	■ BRD01.1004.5830R
125	22/40	30+2	3+3	12	45°	4	■ BRD01.1254.4030R
125	30/58	30+2	3+3	18	45°	4	■ BRD01.1254.5830R
180	22/40	35+2	5+5	20	45°	4	■ BRD03.1804.4035R
180	22/40	40+2	5+5	20	45°	4	■ BRD03.1804.4040R
180	22/40	35+2	6+6	24	45°	4	■ BRD04.1804.4035R
180	22/40	40+2	6+6	24	45°	4	■ BRD04.1804.4040R
180	30/58	35+2	5+5	30	45°	4	■ BRD03.1804.5835R
180	30/58	40+2	5+5	30	45°	4	■ BRD03.1804.5835R
180	30/58	35+2	6+6	36	45°	4	■ BRD04.1804.5835R
180	30/58	40+2	6+6	36	45°	4	■ BRD04.1804.5840R
180	22/40	35+2	8+8	32	45°	4	■ BRD05.1804.4035R
180	22/40	40+2	8+8	32	45°	4	■ BRD05.1804.4040R
180	30/58	35+2	8+8	48	45°	4	■ BRD05.1804.5835R
180	30/58	40+2	8+8	48	45°	4	■ BRD05.1804.5840R
200	22/40	35+2	5+5	20	45°	4	■ BRD03.2004.4035R
200	22/40	40+2	5+5	20	45°	4	■ BRD03.2004.4040R
200	22/40	35+2	6+6	24	45°	4	■ BRD04.2004.4035R
200	22/40	40+2	6+6	24	45°	4	■ BRD04.2004.4040R
200	22/40	35+2	8+8	30	45°	4	■ BRD05.2004.4035R
200	22/40	40+2	8+8	30	45°	4	■ BRD05.2004.4040R
200	30/58	35+2	5+5	36	45°	4	■ BRD03.2004.5835R

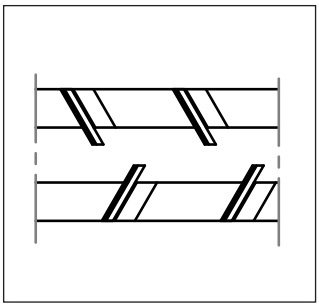

FRESA BORDATRICI IN PCD REGISTRABILI 45° - H4

JOINTING CUTTERS IN DIAMOND WITH ELICOIDAL ADJUSTABLE 45° - H4

D	S	F	Z	Z.TOT	AXIAL	H	CODE
200	30/58	40+2	5+5	36	45°	4	■ BRD03.2004.5840R
200	30/58	35+2	6+6	32	45°	4	■ BRD04.2004.5835R
200	30/58	40+2	6+6	32	45°	4	■ BRD04.2004.5840R
200	30/58	35+2	8+8	48	45°	4	■ BRD05.2004.5835R
200	30/58	40+2	8+8	48	45°	4	■ BRD05.2004.5840R

FRESA BORDATRICI IN PCD REGISTRABILI 45° - H6
JOINTING CUTTERS IN DIAMOND WITH ELICOIDAL ADJUSTABLE 45° - H6

- FRESA A FINIRE PER BORDATRICI REGISTRABILI, ADATTA PER LAVORAZIONI DI PANNELLI NOBILITATI, TRUCIOLARI, RIVESTITI, IMPIALLACCIATI, LAMINATI, M.D.F., OTTIMA FINITURA, BASSA RUMOROSITÀ
- *JOINTING CUTTERS IN DIAMOND FOR EDGE BANDING MACHINERY ADJUSTABLE, SUITABLE FOR WORKING COATED, CHIPBOARD PANELS, VENEERED, LAMINATED, M.D.F. EXCELLENT FINISHING, LOW NOISINESS.*

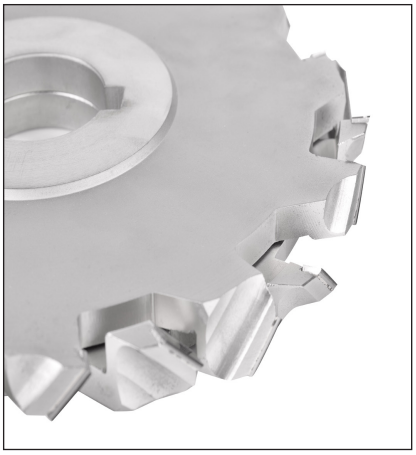

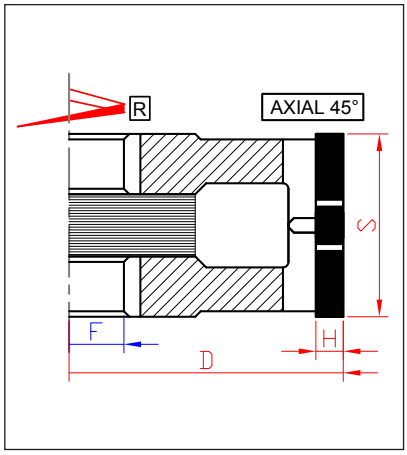

● = ready in stock ■ = delivery time 20 working day ▲ = on request

D	S	F	Z	Z.TOT	AXIAL	H	CODE
80	22/40	30+2	3+3	12	45°	6	■ BRD01.0806.4030R
80	30/58	30+2	3+3	18	45°	6	■ BRD01.0806.5830R
100	22/40	30+2	3+3	12	45°	6	■ BRD01.1006.4030R
100	30/58	30+2	3+3	18	45°	6	■ BRD01.1006.5830R
125	22/40	30+2	3+3	12	45°	6	■ BRD01.1256.4030R
125	30/58	30+2	3+3	18	45°	6	■ BRD01.1256.5830R
180	22/40	35+2	5+5	20	45°	6	■ BRD03.1806.4035R
180	22/40	40+2	5+5	20	45°	6	■ BRD03.1806.4040R
180	22/40	35+2	6+6	24	45°	6	■ BRD04.1806.4035R
180	22/40	40+2	6+6	24	45°	6	■ BRD04.1806.4040R
180	30/58	35+2	5+5	30	45°	6	■ BRD03.1806.5835R
180	30/58	40+2	5+5	30	45°	6	■ BRD03.1806.5835R
180	30/58	35+2	6+6	36	45°	6	■ BRD04.1806.5835R
180	30/58	40+2	6+6	36	45°	6	■ BRD04.1806.5840R
180	22/40	35+2	8+8	32	45°	6	■ BRD05.1806.4035R
180	22/40	40+2	8+8	32	45°	6	■ BRD05.1806.4040R
180	30/58	35+2	8+8	48	45°	6	■ BRD05.1806.5835R
180	30/58	40+2	8+8	48	45°	6	■ BRD05.1806.5840R
200	22/40	35+2	5+5	20	45°	6	■ BRD03.2006.4035R
200	22/40	40+2	5+5	20	45°	6	■ BRD03.2006.4040R
200	22/40	35+2	6+6	24	45°	6	■ BRD04.2006.4035R
200	22/40	40+2	6+6	24	45°	6	■ BRD04.2006.4040R
200	22/40	35+2	8+8	30	45°	6	■ BRD05.2006.4035R
200	22/40	40+2	8+8	30	45°	6	■ BRD05.2006.4040R
200	30/58	35+2	5+5	36	45°	6	■ BRD03.2006.5835R

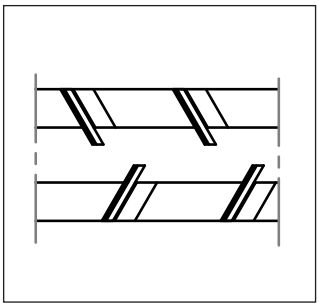

DORIGO UTENSILI
DIAMOND & HARD METAL TOOLS

FRESA BORDATRICI IN PCD REGISTRABILI 45° - H6

JOINTING CUTTERS IN DIAMOND WITH ELICOIDAL ADJUSTABLE 45° - H6

D	S	F	Z	Z.TOT	AXIAL	H	CODE
200	30/58	40+2	5+5	36	45°	6	■ BRD03.2006.5840R
200	30/58	35+2	6+6	32	45°	6	■ BRD04.2006.5835R
200	30/58	40+2	6+6	32	45°	6	■ BRD04.2006.5840R
200	30/58	35+2	8+8	48	45°	6	■ BRD05.2006.5835R
200	30/58	40+2	8+8	48	45°	6	■ BRD05.2006.5840R

FRESA BORDATRICI IN PCD REGISTRABILI 54° - H4

JOINTING CUTTERS IN DIAMOND WITH ELICOIDAL ADJUSTABLE 54° - H4

- FRESA A FINIRE PER BORDATRICI REGISTRABILI, ADATTA PER LAVORAZIONI DI PANNELLI NOBILITATI, TRUCIOLARI, RIVESTITI, IMPIALLACCIATI, LAMINATI, M.D.F., OTTIMA FINITURA, BASSA RUMOROSITÀ.
- *JOINTING CUTTERS IN DIAMOND FOR EDGE BANDING MACHINERY ADJUSTABLE, SUITABLE FOR WORKING COATED, CHIPBOARD PANELS, VENEERED, LAMINATED, M.D.F. EXCELLENT FINISHING, LOW NOISINESS.*

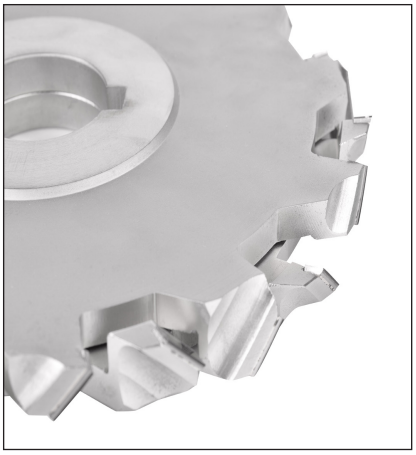

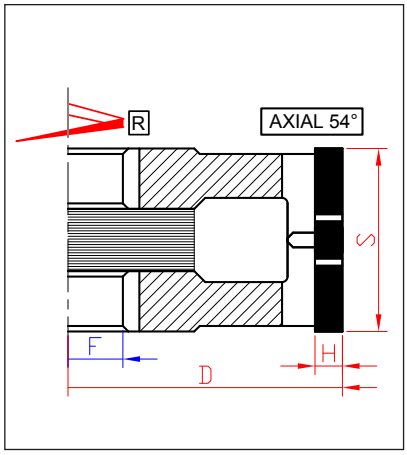

● = ready in stock ■ = delivery time 20 working day ▲ = on request

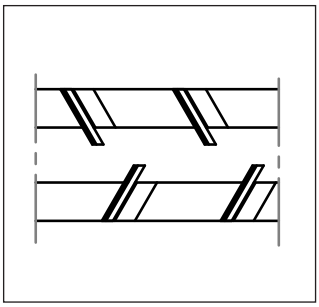

D	S	F	Z	Z.TOT	AXIAL	H	CODE
80	22/40	30+2	3+3	12	54°	4	■ BRD01.0804.4030R
80	30/58	30+2	3+3	18	54°	4	■ BRD01.0804.5830R
100	22/40	30+2	3+3	12	54°	4	■ BRD01.1004.4030R
100	30/58	30+2	3+3	18	54°	4	■ BRD01.1004.5830R
125	22/40	30+2	3+3	12	54°	4	■ BRD01.1254.4030R
125	30/58	30+2	3+3	18	54°	4	■ BRD01.1254.5830R
180	22/40	35+2	5+5	20	54°	4	■ BRD03.1804.4035R
180	22/40	40+2	5+5	20	54°	4	■ BRD03.1804.4040R
180	22/40	35+2	6+6	24	54°	4	■ BRD04.1804.4035R
180	22/40	40+2	6+6	24	54°	4	■ BRD04.1804.4040R
180	30/58	35+2	5+5	30	54°	4	■ BRD03.1804.5835R
180	30/58	40+2	5+5	30	54°	4	■ BRD03.1804.5835R
180	30/58	35+2	6+6	36	54°	4	■ BRD04.1804.5835R
180	30/58	40+2	6+6	36	54°	4	■ BRD04.1804.5840R
180	22/40	35+2	8+8	32	54°	4	■ BRD05.1804.4035R
180	22/40	40+2	8+8	32	54°	4	■ BRD05.1804.4040R
180	30/58	35+2	8+8	48	54°	4	■ BRD05.1804.5835R
180	30/58	40+2	8+8	48	54°	4	■ BRD05.1804.5840R
200	22/40	35+2	5+5	20	54°	4	■ BRD03.2004.4035R
200	22/40	40+2	5+5	20	54°	4	■ BRD03.2004.4040R
200	22/40	35+2	6+6	24	54°	4	■ BRD04.2004.4035R
200	22/40	40+2	6+6	24	54°	4	■ BRD04.2004.4040R
200	22/40	35+2	8+8	30	54°	4	■ BRD05.2004.4035R
200	22/40	40+2	8+8	30	54°	4	■ BRD05.2004.4040R
200	30/58	35+2	5+5	36	54°	4	■ BRD03.2004.5835R

FRESA BORDATRICI IN PCD REGISTRABILI 54° - H4

JOINTING CUTTERS IN DIAMOND WITH ELICOIDAL ADJUSTABLE 54° - H4

D	S	F	Z	Z.TOT	AXIAL	H	CODE
200	30/58	40+2	5+5	36	54°	4	■ BRD03.2004.5840R
200	30/58	35+2	6+6	32	54°	4	■ BRD04.2004.5835R
200	30/58	40+2	6+6	32	54°	4	■ BRD04.2004.5840R
200	30/58	35+2	8+8	48	54°	4	■ BRD05.2004.5835R
200	30/58	40+2	8+8	48	54°	4	■ BRD05.2004.5840R

FRESA BORDATRICI IN PCD REGISTRABILI 54° - H6

JOINTING CUTTERS IN DIAMOND WITH ELICOIDAL ADJUSTABLE 54° - H6

- FRESA A FINIRE PER BORDATRICI REGISTRABILI, ADATTA PER LAVORAZIONI DI PANNELLI NOBILITATI, TRUCIOLARI, RIVESTITI, IMPIALLACCIATI, LAMINATI, M.D.F., OTTIMA FINITURA, BASSA RUMOROSITÀ.
- *JOINTING CUTTERS IN DIAMOND FOR EDGE BANDING MACHINERY ADJUSTABLE, SUITABLE FOR WORKING COATED, CHIPBOARD PANELS, VENEERED, LAMINATED, M.D.F. EXCELLENT FINISHING, LOW NOISINESS.*

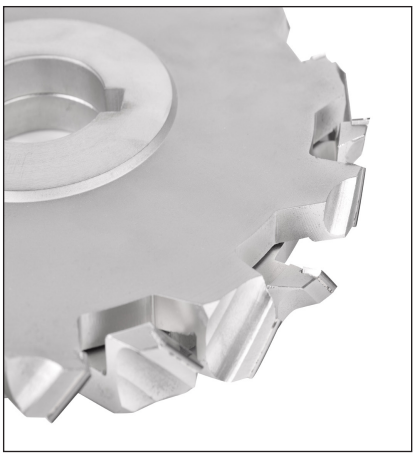

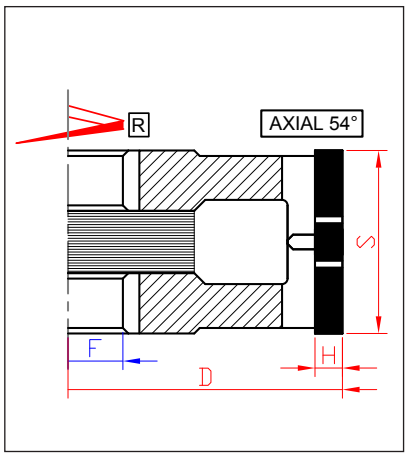

● = ready in stock ■ = delivery time 20 working day ▲ = on request

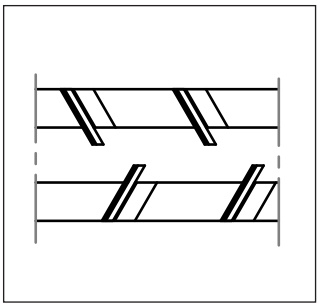

D	S	F	Z	Z.TOT	AXIAL	H	CODE
80	22/40	30+2	3+3	12	54°	6	■ BRD01.0806.4030R
80	30/58	30+2	3+3	18	54°	6	■ BRD01.0806.5830R
100	22/40	30+2	3+3	12	54°	6	■ BRD01.1006.4030R
100	30/58	30+2	3+3	18	54°	6	■ BRD01.1006.5830R
125	22/40	30+2	3+3	12	54°	6	■ BRD01.1256.4030R
125	30/58	30+2	3+3	18	54°	6	■ BRD01.1256.5830R
180	22/40	35+2	5+5	20	54°	6	■ BRD03.1806.4035R
180	22/40	40+2	5+5	20	54°	6	■ BRD03.1806.4040R
180	22/40	35+2	6+6	24	54°	6	■ BRD04.1806.4035R
180	22/40	40+2	6+6	24	54°	6	■ BRD04.1806.4040R
180	30/58	35+2	5+5	30	54°	6	■ BRD03.1806.5835R
180	30/58	40+2	5+5	30	54°	6	■ BRD03.1806.5835R
180	30/58	35+2	6+6	36	54°	6	■ BRD04.1806.5835R
180	30/58	40+2	6+6	36	54°	6	■ BRD04.1806.5840R
180	22/40	35+2	8+8	32	54°	6	■ BRD05.1806.4035R
180	22/40	40+2	8+8	32	54°	6	■ BRD05.1806.4040R
180	30/58	35+2	8+8	48	54°	6	■ BRD05.1806.5835R
180	30/58	40+2	8+8	48	54°	6	■ BRD05.1806.5840R
200	22/40	35+2	5+5	20	54°	6	■ BRD03.2006.4035R
200	22/40	40+2	5+5	20	54°	6	■ BRD03.2006.4040R
200	22/40	35+2	6+6	24	54°	6	■ BRD04.2006.4035R
200	22/40	40+2	6+6	24	54°	6	■ BRD04.2006.4040R
200	22/40	35+2	8+8	30	54°	6	■ BRD05.2006.4035R
200	22/40	40+2	8+8	30	54°	6	■ BRD05.2006.4040R
200	30/58	35+2	5+5	36	54°	6	■ BRD03.2006.5835R

FRESA BORDATRICI IN PCD REGISTRABILI 54° - H6

JOINTING CUTTERS IN DIAMOND WITH ELICOIDAL ADJUSTABLE 54° - H6

D	S	F	Z	Z.TOT	AXIAL	H	CODE
200	30/58	40+2	5+5	36	54°	6	■ BRD03.2006.5840R
200	30/58	35+2	6+6	32	54°	6	■ BRD04.2006.5835R
200	30/58	40+2	6+6	32	54°	6	■ BRD04.2006.5840R
200	30/58	35+2	8+8	48	54°	6	■ BRD05.2006.5835R
200	30/58	40+2	8+8	48	54°	6	■ BRD05.2006.5840R

PUNTA IN DIAMANTE PER INCASTRI LAMELLO
JROUTER BITS IN DIAMOND FOR LAMELLO

- PUNTA IN DIAMANTE PER INCASTRI LAMELLO, INDICATE PER LAVORAZIONI SU MACCHINE A CNC.
- *ROUTER BITS IN DIAMOND FOR LAMELLO, SUITABLE FOR WORKING ON CNC MACHINE.*

● = ready in stock ■ = delivery time 20 working day ▲ = on request

D	S	d	LT	Z.1	H	CODE RH
10	20	12X50	75	1	3	● PSD.13560

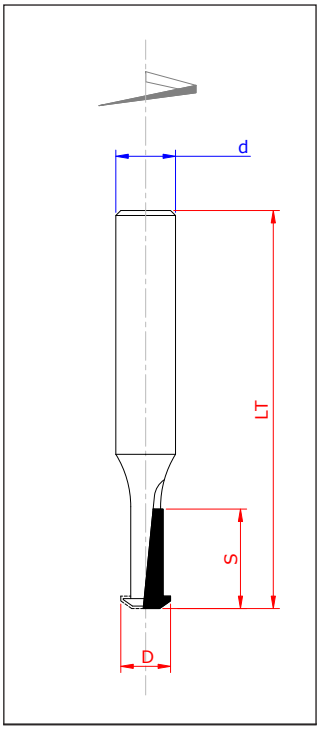

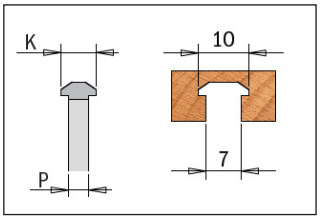

DORIGO UTENSILI
DIAMOND & HARD METAL TOOLS

PUNTE PANTOGRAFO IN DIAMANTE ELICOIDALE

1 PUNTO DI TAGLIO - 2 DIVISIONI - CORPO IN ACCIAIO

ROUTER BITS IN DIAMOND HELICOIDAL

1 CUTTING POINT - 2 DIVISION- STEEL BODY

- PUNTE PANTOGRAFO TIPO ECONOMICO AD 1 PUNTO DI TAGLIO ,TAGLIENTI POSITIVI/NEGATIVI. INDICATE PER IL TAGLIO PANNELLI IN TRUCIOLARE MELAMINICO, GREZZO, LAMINATO, RIVESTIMENTO IMPIALLACCIATO. OTTIMA FINITURA SUI LATI INFERIORE E SUPERIORE. BASSA RUMOROSITÀ.
- *ECONOMICAL ROUTER BITS 1 CUTTING POINT NEGATIVE/POSITIVE, SUITABLE FOR WORKING ON CHIPBOARD PANELS LAMINATED, VENEERING, MELAMINE. EXCELLENT FINISHING ON THE UPPER AND LOWER SIDE, LOW NOISINESS.*

● = ready in stock ■ = delivery time 20 working day ▲ = on request

D	S	d	LT	Z1	H	CODE RH	CODE LH
8	25	12X40	75	3+1dia	3	● P1D01.BCD03.301.R	■ P1D01.BCD03.301.L
10	25	12X40	75	3+1 dia	3	● P1D01.CCD03.301.R	■ P1D01.CCD03.301.L
10	36	12X40	84	4+1 dia	3	● P1D03.CCD04.301.R	■ P1D03.CCD04.301.L

RPM: 20000-24000 FEED/SPEED: 4-6 m/min

I DATI DI LAVORO SONO INDICATIVI - WORK DATA ARE INDICATIVE

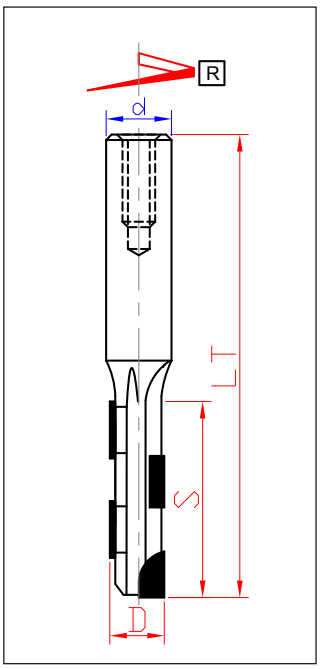

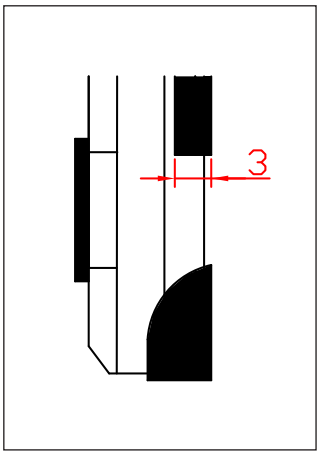

PUNTE PANTOGRAFO IN DIAMANTE ELICOIDALE
1 PUNTO DI TAGLIO - 3 DIVISIONI - CORPO IN ACCIAIO
ROUTER BITS IN DIAMOND HELICOIDAL
1 CUTTING POINT - 3 DIVISION- STEEL BODY

- PUNTE PANTOGRAFO TIPO ECONOMICO AD 1 PUNTO DI TAGLIO, TAGLIENTI POSITIVI/NEGATIVI. INDICATE PER IL TAGLIO PANNELLI IN TRUCIOLARE MELAMINICO, GREZZO, LAMINATO, RIVESTIMENTO IMPIALLACCIATO. OTTIMA FINITURA SUI LATI INFERIORE E SUPERIORE. BASSA RUMOROSITÀ.
- *ECONOMICAL ROUTER BITS 1 CUTTING POINT NEGATIVE/POSITIVE, SUITABLE FOR WORKING ON CHIPBOARD PANELS LAMINATED, VENEERING, MELAMINE. EXCELLENT FINISHING ON THE UPPER AND LOWER SIDE, LOW NOISINESS.*

● = ready in stock ■ = delivery time 20 working day ▲ = on request

D	S	d	LT	Z.1	H	CODE RH	CODE LH
12	27	12x40	75	3+1dia	3	● P2D02.DCD03.301.R	● P2D02.DCD03.301.L
12	27	20x50	84	3+1dia	3	■ P2D02.DCJ03.301.R	■ P2D02.DCH03.301.L
12	36	12x40	84	4+1dia	3	● P2D03.DCD04.301.R	● P2D03.DCD04.301.L
16	27	16x50	87	3+1 hm	3	● P2D02.HCH03.302.R	● P2D02.HCH03.302.L
16	36	16x50	95	4+1 hm	3	● P2D03.HCH04.301.R	● P2D03.HCH04.301.L
16	44	16x50	105	5+1 hm	3	● P2D04.HCH05.301.R	● P2D04.HCD05.301.L
16	53	16x50	113	6+1 hm	3	● P2D05.HCH06.301.R	● P2D05.HCH06.301.L
16	27	20x50	87	3+1 hm	3	■ P2D02.HCJ03.301.R	■ P2D02.HCJ03.301.L
16	36	20x50	95	4+1 hm	3	■ P2D03.HCJ04.301.R	■ P2D03.HCJ04.301.L
16	44	20x50	105	5+1 hm	3	● P2D04.HCJ05.301.R	● P2D04.HCJ05.301.L
16	53	20x50	113	6+1 hm	3	■ P2D05.HCJ06.301.R	■ P2D05.HCJ06.301.L
18	27	20x50	87	3+1 hm	3	■ P2D02.ICJ03.301.R	■ P2D02.ICJ03.301.L
18	36	20x50	95	4+1 hm	3	■ P2D03.ICJ04.301.R	■ P2D03.ICJ04.301.L
18	44	20x50	105	5+1 hm	3	■ P2D04.ICJ05.301.R	■ P2D04.ICJ05.301.L
18	53	20x50	113	6+1 hm	3	■ P2D05.ICJ06.301.R	■ P2D05.ICJ06.301.L
18	61	20x50	121	7+1 hm	3	■ P2D06.ICI07.301.R	■ P2D06.ICI07.301.L
18	70	20x50	130	8+1 hm	3	■ P2D07.ICI08.301.R	■ P2D07.ICI08.301.L
20	27	20x50	87	3+1 hm	3	● P2D02.JCJ03.301.R	● P2D02.JCJ03.301.L
20	36	20x50	95	4+1 hm	3	● P2D03.JCJ04.301.R	● P2D03.JCJ04.301.L
20	44	20x50	105	5+1 hm	3	● P2D04.JCJ05.302.R	● P2D04.JCJ05.302.L
20	53	20x50	113	6+1 hm	3	● P2D05.JCJ06.301.R	● P2D05.JCJ06.301.L
20	61	20x50	121	7+1 hm	3	● P2D06.JCJ07.301.R	● P2D06.JCJ07.301.L
20	70	20x50	130	8+1 hm	3	● P2D07.JCJ08.301.R	● P2D07.JCJ08.301.L
25	27	25X50	87	3+1hm	3	■ P2D02.LCL03.301.R	■ P2D02.LCL03.301.L
25	36	25X50	95	4+1 hm	3	■ P2D03.LCL04.301.R	■ P2D03.LCL04.301.L
25	44	25X50	105	5+1 hm	3	■ P2D04.LCL05.301.R	■ P2D04.LCL05.301.L
25	53	25X50	113	6+1 hm	3	■ P2D05.LCL06.301.R	■ P2D05.LCL06.301.L
25	61	25X50	121	7+1 hm	3	■ P2D06.LCL07.301.R	■ P2D06.LCL07.301.L
25	70	25X50	130	8+1 hm	3	■ P2D07.LCL08.301.R	■ P2D07.LCL08.301.L

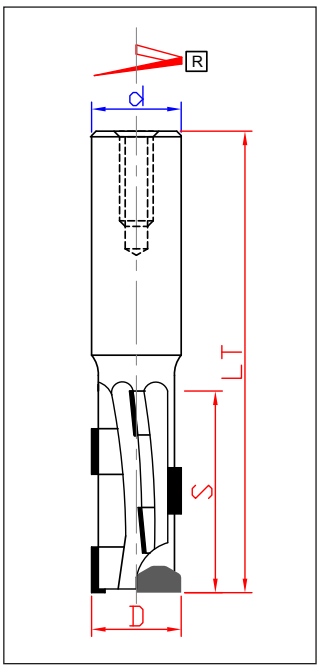

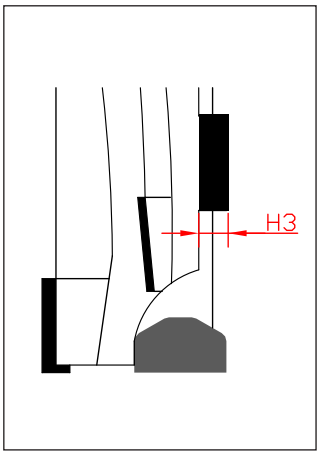

RPM: 18000-24000 FEED/SPEED: 6 m/min

I DATI DI LAVORO SONO INDICATIVI - WORK DATA ARE INDICATIVE

PUNTE PANTOGRAFO IN DIAMANTE ELICOIDALE
2 PUNTI DI TAGLIO - 4 DIVISIONI - CORPO IN ACCIAIO
ROUTER BITS IN DIAMOND HELICOIDAL
2 CUTTING POINT - 4 DIVISION- STEEL BODY

- PUNTE PANTOGRAFO TIPO ECONOMICO AD 2 PUNTI DI TAGLIO ,TAGLIENTI POSITIVI/NEGATIVI. INDICATE PER IL TAGLIO PANNELLI IN TRUCIOLARE MELAMINICO, GREZZO, LAMINATO, RIVESTIMENTO IMPIALLACCIATO. OTTIMA FINITURA SUI LATI INFERIORE E SUPERIORE. BASSA RUMOROSITÀ.
- *ECONOMICAL ROUTER BITS 2 CUTTING POINT NEGATIVE/POSITIVE, SUITABLE FOR WORKING ON CHIPBOARD PANELS LAMINATED, VENEERING, MELAMINE. EXCELLENT FINISHING ON THE UPPER AND LOWER SIDE, LOW NOISINESS.*

● = ready in stock ■ = delivery time 20 working day ▲ = on request

D	S	d	LT	Z.2	H	CODE RH	CODE LH
12	27	12X40	75	6+1dia	3	● P4D01.DCD06.3A1.R	● P4D01.DCD06.3A1.L
12	34	12X40	77	8+1dia	3	● P4D02.DCD08.3A1.R	● P4D02.DCD08.3A1.R
16	27	16X50	87	6+1 dia	3	● P4D01.HCH06.301.R	● P4D01.HCH06.301.L
16	36	16X50	96	8+1dia	3	● P4D02.HCH08.301.R	● P4D02.HCH08.301.L
16	44	16X50	105	10+1dia	3	● P4D03.HCH10.301.R	● P4D03.HCH10.301.L
16	53	16X50	113	12+1dia	3	● P4D04.HCH12.301.R	● P4D04.HCH12.301.L
18	36	20X50	96	8+1dia	3	■ P4D02.ICJ08.301.R	■ P4D02.ICJ08.301.L
18	44	20X50	105	10+1dia	3	■ P4D03.ICJ10.301.R	■ P4D03.ICJ10.301.L
18	53	20X50	113	12+1dia	3	■ P4D04.ICJ12.301.R	■ P4D04.ICJ12.301.L
20	27	20X50	87	6+1 dia	3	■ P4D01.JCJ06.301.R	■ P4D01.JCJ06.301.L
20	36	20X50	96	8+1dia	3	● P4D02.JCL08.301.R	● P4D02.JCL08.301.L
20	44	20X50	105	10+1dia	3	● P4D03.JCJ10.301.R	● P4D03.JCJ10.301.L
20	53	20X50	113	12+1dia	3	● P4D04.JCJ12.301.R	● P4D04.JCJ12.301.L
20	61	20X50	122	14+1dia	3	● P4D05.JCJ14.301.R	● P4D05.JCJ14.301.L
20	70	20X50	130	16+1dia	3	● P4D06.JCJ16.301.R	● P4D06.JCJ16.301.L

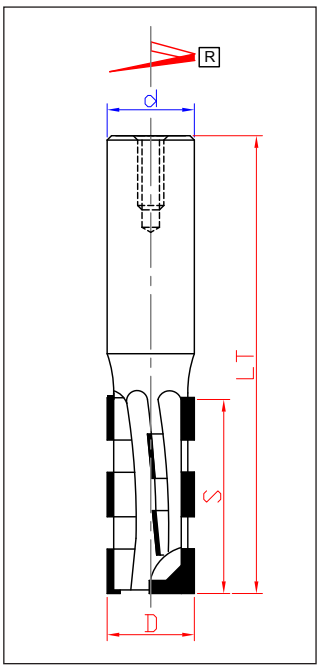

RPM: 18000-24000 FEED/SPEED 8-10 m/min

I DATI DI LAVORO SONO INDICATIVI - WORK DATA ARE INDICATIVE

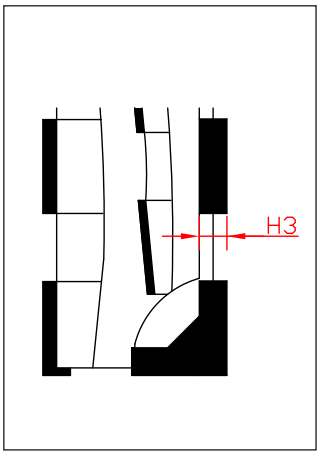

PUNTE PANTOGRAFO IN DIAMANTE ELICOIDALE
2 PUNTI DI TAGLIO - 4 DIVISIONI - CORPO IN ACCIAIO
ROUTER BITS IN DIAMOND HELICOIDAL
2 CUTTING POINT - 4 DIVISION- STEEL BODY

- PUNTE PANTOGRAFO TIPO ECONOMICO AD 2 PUNTI DI TAGLIO, TAGLIENTI POSITIVI/NEGATIVI. INDICATE PER IL TAGLIO PANNELLI IN TRUCIOLARE MELAMINICO, GREZZO, LAMINATO, RIVESTIMENTO IMPIALLACCIATO. OTTIMA FINITURA SUI LATI INFERIORE E SUPERIORE. BASSA RUMOROSITÀ.
- *ECONOMICAL ROUTER BITS 2 CUTTING POINT NEGATIVE/POSITIVE, SUITABLE FOR WORKING ON CHIPBOARD PANELS LAMINATED, VENEERING, MELAMINE. EXCELLENT FINISHING ON THE UPPER AND LOWER SIDE, LOW NOISINESS.*

● = ready in stock ■ = delivery time 20 working day ▲ = on request

D	S	d	LT	Z.2	H	CODE RH	CODE LH
20	27	20X50	87	6+1 dia	4	■ P4D01.JCJ06.401.R	■ P4D01.JCJ06.401.L
20	36	20X50	96	8+1dia	4	● P4D02.JCJ08.401.R	● P4D02.JCJ08.401.L
20	45	20X50	105	10+1dia	4	● P4D03.JCJ10.401.R	● P4D03.JCJ10.401.L
20	53	20X50	113	12+1dia	4	● P4D04.JCJ12.401.R	● P4D04.JCJ12.401.L
20	62	20X50	122	14+1dia	4	■ P4D05.JCJ14.401.R	■ P4D05.JCJ14.401.L
20	70	20X50	130	16+1dia	4	■ P4D06.JCJ16.401.R	■ P4D06.JCJ16.401.L
22	27	20X50	87	6+1 dia	4	■ P4D01.KCJ06.401.L	■ P4D01.KCL06.301.R
22	36	20X50	96	8+1dia	4	■ P4D02.KCJ08.401.R	■ P4D02.KCJ08.401.L
22	45	20X50	105	10+1dia	4	■ P4D03.KCJ10.401.R	■ P4D03.KCJ10.401.L
22	53	20X50	113	12+1dia	4	■ P4D04.KCJ12.401.R	■ P4D04.KCJ12.401.L
22	62	20X50	122	14+1dia	4	■ P4D05.KCJ14.401.R	■ P4D05.KCJ14.401.L
22	70	20X50	130	16+1dia	4	■ P4D06.KCJ16.402.R	■ P4D06.KCJ16.402.L
25	27	25X50	87	6+1 dia	4	■ P4D01.LCL06.401.R	■ P4D01.LCL06.401.L
25	36	25X50	96	8+1dia	4	■ P4D02.LCL08.401.R	■ P4D02.LCL08.401.L
25	45	25X50	105	10+1dia	4	■ P4D03.LCJ10.401.R	■ P4D03.LCJ10.401.L
25	53	25X50	113	12+1dia	4	■ P4D04.LCL12.401.R	■ P4D04.LCL12.401.L
25	62	25X50	122	14+1dia	4	■ P4D05.LCL14.401.R	■ P4D05.LCL14.401.L
25	70	25X50	130	16+1dia	4	■ P4D06.LCL16.401.R	■ P4D06.LCL16.401.L

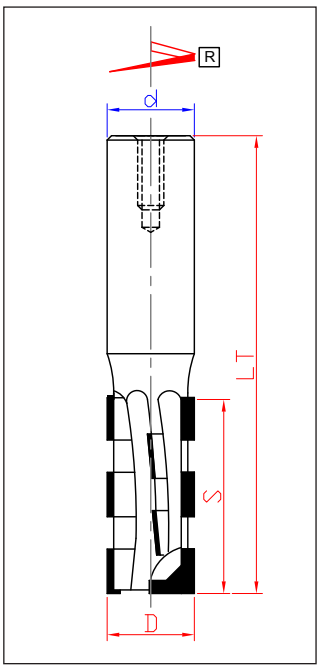

RPM: 18000-24000 FEED/SPEED: 8-10 m/min

I DATI DI LAVORO SONO INDICATIVI - WORK DATA ARE INDICATIVE

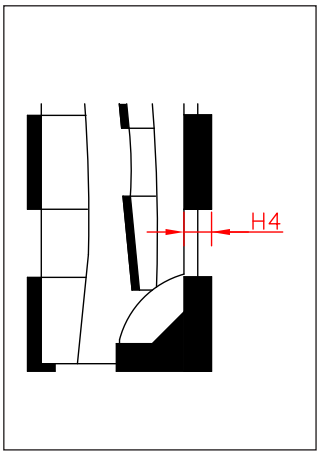

PUNTE PANTOGRAFO TIPOLOGIA RICCIO
2 PUNTI DI TAGLIO - 4 DIVISIONI - CORPO IN ACCIAIO
ROUTER BITS CURLY TYPE
2 CUTTING POINT - 4 DIVISION- STEEL BODY

- PUNTE PANTOGRAFO A 2 PUNTI DI TAGLIO CON 4 DIVISIONI, TAGLIENTI POSITIVI/NEGATIVI. INDICATE PER IL TAGLIO PANNELLI IN TRUCIOLARE MELAMINICO, GREZZO, LAMINATO, RIVESTIMENTO IMPIALLACCIATO. OTTIMA FINITURA SUI LATI INFERIORE E SUPERIORE. BASSA RUMOROSITÀ.
- *ROUTER BITS IN DIAMOND WITH 2 CUTTING POINT - 4 DIVISION, CUTTERS NEGATIVE/POSITIVE, SUITABLE FOR WORKING ON CHIPBOARD PANELS LAMINATED, VENEERING,MELAMINE. EXCELLENT FINISHING ON THE UPPER AND LOWER SIDE, LOW NOISINESS.*

● = ready in stock ■ = delivery time 20 working day ▲ = on request

D	S	d	LT	Z.2	H	CODE RH	CODE LH
20	22	20x50	82	8+1dia	4	PRD01.JCJ08.401.R	■ PRD01.JCJ08.401.L
20	28	20x50	88	10+1dia	4	● PRD02.JCJ10.401.R	■ PRD02.JCJ10.401.L
20	33	20x50	93	12+1dia	4	● PRD03.JCJ12.401.R	■ PRD03.JCJ12.401.L
20	39	20x50	99	14+1dia	4	● PRD04.JCJ14.401.R	■ PRD04.JCJ14.401.L
20	44	20x50	105	16+1dia	4	■ PRD05.JCJ16.401.R	■ PRD05.JCJ16.401.L
20	50	20x50	110	18+1dia	4	■ PRD06.JCJ18.401.R	■ PRD06.JCJ18.401.L
20	55	20x50	115	20+1dia	4	■ PRD07.JCJ20.401.R	■ PRD07.JCJ20.401.L
20	61	20x50	121	22+1dia	4	■ PRD08.JCJ22.401.R	■ PRD08.JCJ22.401.L
22	22	20x50	82	8+1dia	4	■ PRD01.KCJ08.401.R	■ PRD01.KCJ08.401.L
22	28	20x50	88	10+1dia	4	■ PRD02.JCJ10.401.R	■ PRD02.JCJ10.401.L
22	33	20x50	93	12+1dia	4	■ PRD03.KCJ12.401.R	■ PRD03.KCJ12.401.L
22	39	20x50	99	14+1dia	4	■ PRD04.KCJ14.401.R	■ PRD04.KCJ14.401.L
22	44	20x50	105	16+1dia	4	■ PRD05.KCJ16.402.R	■ PRD05.KCJ16.402.L
22	50	20x50	110	18+1dia	4	■ PRD06.KCJ18.401.R	■ PRD06.KCJ18.401.L
25	33	25X55	93	12+1dia	4	■ PRD03.LCL12.401.R	■ PRD03.LCL12.401.L
25	39	25X55	99	14+1dia	4	■ PRD04.LCL14.401.R	■ PRD04.LCL14.401.L
25	44	25X55	105	16+1dia	4	■ PRD05.LCL16.401.R	■ PRD05.LCL16.401.L
25	50	25X55	110	18+1dia	4	■ PRD06.LCL18.401.R	■ PRD06.LCL18.401.L
25	55	25X55	115	20+1dia	4	■ PRD07.LCL20.401.R	■ PRD07.LCL20.401.L
25	61	25X55	121	22+1dia	4	■ PRD08.LCL22.401.R	■ PRD08.LCL22.401.L
25	67	25X55	126	24+1dia	4	■ PRD08.LCL23.401.R	■ PRD08.LCL23.401.L

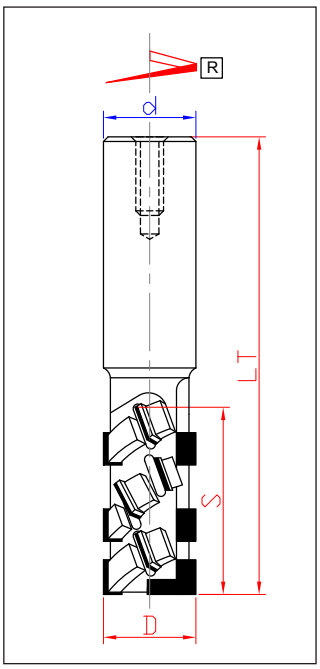

RPM: 18000-24000 FEED/SPEED: 10-12 m/min

I DATI DI LAVORO SONO INDICATIVI - WORK DATA ARE INDICATIVE

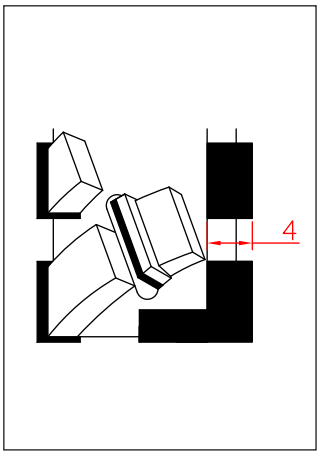

PUNTE PANTOGRAFO CON ROMPITRUCIOLO
3 PUNTI DI TAGLIO - 3 DIVISIONI - CORPO IN ACCIAIO
ROUTER BITS WITH CHIPBREAKER
3 CUTTING POINT - 3 DIVISION- STEEL BODY

- PUNTE PANTOGRAFO A 3 PUNTI DI TAGLIO CON 3 DIVISIONI, TAGLIENTI POSITIVI/NEGATIVI. INDICATE PER IL TAGLIO PANNELLI IN TRUCIOLARE MELAMINICO, GREZZO, LAMINATO, RIVESTIMENTO IMPIALLACCIATO. OTTIMA FINITURA SUI LATI INFERIORE E SUPERIORE. ALTA VELOCITÀ DI AVANZAMENTO.
- *ROUTER BITS IN DIAMOND WITH 3 CUTTING POINT - 3 DIVISION, CUTTERS NEGATIVE/POSITIVE, SUITABLE FOR WORKING ON CHIPBOARD PANELS LAMINATED, VENEERING, MELAMINE. EXCELLENT FINISHING ON THE UPPER AND LOWER SIDE, HIGH FEEDING SPEED.*

● = ready in stock ■ = delivery time 20 working day ▲ = on request

D	S	d	LT	Z.3	H	CODE RH	CODE LH
16	25	16X50	85	9+1 dia	4	● PPD02.HCH09.401.R	■ PPD02.HCH09.401.L
16	30	16X50	90	12+1 dia	4	● PPD03.HCJ11.401.R	■ PPD03.HCJ11.401.L
16	35	16X50	95	13+1 dia	4	● PPD04.HCH13.401.R	■ PPD04.HCH13.401.L
16	40	16X50	100	15+1 dia	4	■ PPD05.HCH15.401.R	■ PPD05.HCH15.401.L
16	45	16X50	105	17+1 dia	4	■ PPD06.HCH17.401.R	■ PPD06.HCH17.401.L
20	25	20X50	85	9+1 dia	4	● PPD02.JCJ09.401.R	■ PPD02.JCJ09.401.L
20	30	20X50	90	12+1 dia	4	● PPD03.JCJ11.401.R	■ PPD03.JCJ11.401.L
20	35	20x50	95	13+1 dia	4	● PPD04.JCJ13.401.R	■ PPD04.JCJ13.401.L
20	40	20X50	100	15+1 dia	4	● PPD05.JCJ15.401.R	■ PPD05.JCJ15.401.L
20	45	20X50	105	17+1 dia	4	● PPD06.JCJ17.401.R	■ PPD06.JCJ17.401.L
20	50	20x50	110	18+1 dia	4	■ PPD07.JCJ19.401.R	■ PPD07.JCJ19.401.L
20	55	20X50	115	20+1 dia	4	■ PPD08.JCJ21.401.R	■ PPD08.JCJ21.401.L
20	60	20X50	120	22+1 dia	4	■ PPD09.JCJ23.401.R	■ PPD09.JCJ23.401.L
20	65	20x50	125	24+1 dia	4	■ PPD10.JCJ25.401.R	■ PPD10.JCJ25.401.L
22	70	20X50	130	26+1 dia	4	■ PPD11.JCJ27.401.R	■ PPD11.JCJ27.401.L
22	75	20X50	135	28+1 dia	4	■ PPD12.KCJ29.401.R	■ PPD12.KCJ29.401.L
22	80	20X50	140	30+1 dia	4	■ PPD13.KCJ31.401.R	■ PPD13.KCJ31.401.L

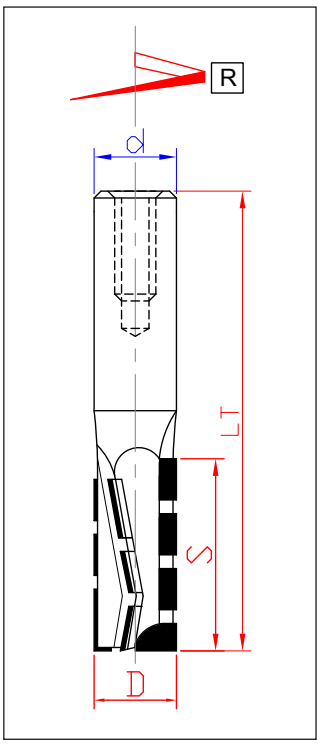

RPM: 18000-24000 FEED/SPEED: 15-25 m/min

I DATI DI LAVORO SONO INDICATIVI - WORK DATA ARE INDICATIVE

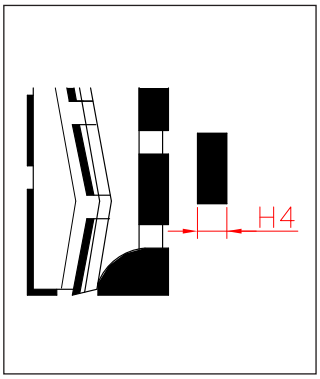

PUNTE PANTOGRAFO CON ROMPITRUCIOLO
3 PUNTI DI TAGLIO - 3 DIVISIONI - CORPO IN ACCIAIO
ROUTER BITS WITH CHIPBREAKER
3 CUTTING POINT - 3 DIVISION- STEEL BODY

- PUNTE PANTOGRAFO A 3 PUNTI DI TAGLIO CON 3 DIVISIONI, TAGLIENTI POSITIVI/NEGATIVI. INDICATE PER IL TAGLIO PANNELLI IN TRUCIOLARE MELAMINICO, GREZZO, LAMINATO, RIVESTIMENTO IMPIALLACCIATO. OTTIMA FINITURA SUI LATI INFERIORE E SUPERIORE. ALTA VELOCITÀ DI AVANZAMENTO.
- *ROUTER BITS IN DIAMOND WITH 3 CUTTING POINT - 3 DIVISION, CUTTERS NEGATIVE/POSITIVE, SUITABLE FOR WORKING ON CHIPBOARD PANELS LAMINATED, VENEERING, MELAMINE. EXCELLENT FINISHING ON THE UPPER AND LOWER SIDE, HIGH FEEDING SPEED.*

● = ready in stock ■ = delivery time 20 working day ▲ = on request

D	S	d	LT	Z.3	H	CODE RH	CODE LH
20	30	20X50	90	12+1dia	5	● PMD01.JCJ12.501.R	■ PMD01.JCJ12.501.L
20	35	20X50	95	15+1dia	5	■ PMD02.JCJ15.501.R	■ PMD02.JCJ15.501.L
20	40	20X50	100	18+1dia	5	● PMD03.JCJ18.501.R	■ PMD03.JCJ18.501.L
20	45	20X50	105	20+1dia	5	● PMD04.JCJ20.501.R	■ PMD04.JCJ20.501.L
20	50	20X50	110	21+1dia	5	● PMD05.JCJ21.501.R	■ PMD05.JCJ21.501.L
20	55	20X50	115	24+1dia	5	■ PMD06.JCJ24.501.R	■ PMD06.JCJ24.501.L
20	60	20X50	120	27+1dia	5	■ PMD07.JCJ27.501.R	■ PMD07.JCJ27.501.L
20	65	20X50	125	29+1dia	5	■ PMD08.JCJ29.501.R	■ PMD08.JCJ29.501.L
22	65	20X50	125	29+1dia	5	● PMD08.KCJ29.501.R	■ PMD08.KCJ29.501.L
22	70	20X50	130	30+1dia	5	■ PMD09.KCJ30.501.R	■ PMD09.KCJ30.501.L
22	75	20X50	135	33+1dia	5	■ PMD10.KCJ33.501.R	■ PMD10.KCJ33.501.L
22	80	20X50	140	36+1dia	5	■ PMD11.KCJ36.501.R	■ PMD11.KCJ36.501.L
25	30	25X55	90	12+1dia	5	■ PMD01.LCL12.501.R	■ PMD01.LCL12.501.L
25	35	25X55	95	15+1dia	5	■ PMD02.LCL15.501.R	■ PMD02.LCL15.501.L
25	40	25X55	100	18+1dia	5	■ PMD03.LCL18.501.R	■ PMD03.LCL18.501.L
25	45	25X55	105	20+1dia	5	■ PMD04.LCL20.501.R	■ PMD04.LCL20.501.L
25	50	25X55	110	21+1dia	5	■ PMD05.LCL21.501.R	■ PMD05.LCL21.501.L
25	55	25X55	115	24+1dia	5	■ PMD06.LCL24.501.R	■ PMD06.LCL24.501.L
25	60	25X55	120	27+1dia	5	■ PMD07.LCL27.501.R	■ PMD07.LCL27.501.L
25	65	25X55	125	29+1dia	5	■ PMD08.LCL29.501.R	■ PMD08.LCL29.501.L
25	70	25X55	130	30+1dia	5	■ PMD09.LCL30.501.R	■ PMD09.LCL30.501.L
25	75	25X55	135	33+1dia	5	■ PMD10.LCL33.501.R	■ PMD10.LCL33.501.L
25	80	25X55	140	36+1dia	5	■ PMD11.LCL36.501.R	■ PMD11.LCL36.501.L

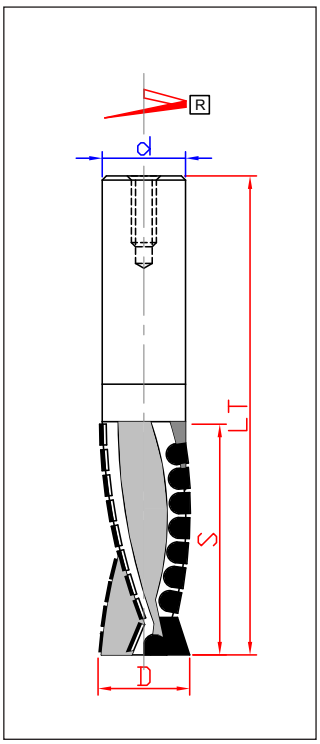

RPM: 18000-24000 FEED/SPEED: 15-25 m/min

I DATI DI LAVORO SONO INDICATIVI - WORK DATA ARE INDICATIVE

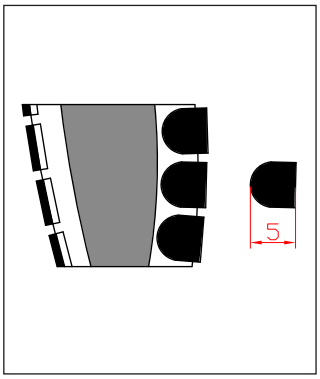

FRESA IN DIAMANTE PER PANTOGRAFO
ELICOIDALE - 40° ASSIALE
CUTTING HEAD WITH SHANK
HELICOIDAL - 40° AXIAL

- FRESA A FINIRE MULTITAGLIENTE CON ASSIALITÀ 40° A 3 O 4 PUNTI DI TAGLIO, TAGLIENTI POSITIVI/NEGATIVI. INDICATE PER LA CONTORNATURA DI PANNELLI IN TRUCIOLARE MELAMINICO, GREZZO, LAMINATO, RIVESTIMENTO IMPIALLACCIATO. OTTIMA FINITURA SUI LATI INFERIORE E SUPERIORE. BASSA RUMOROSITÀ, VELOCITÀ DI AVANZAMENTO ELEVATA.
- *ROUTER BITS IN DIAMOND MULTI-CUTTING WITH AXIAL 40°, WITH 3 OR 4 CUTTING POINT, CUTTERS NEGATIVE/POSITIVE, SUITABLE FOR WORKING ON CHIPBOARD PANELS LAMINATED, VENEERING,MELAMINE. EXCELLENT FINISHING ON THE UPPER AND LOWER SIDE, LOW NOISINESS, HIGH FEEDING SPEED.*

● = ready in stock ■ = delivery time 20 working day ▲ = on request

D	S	d	LT	Z	AXIAL	H	CODE RH	CODE LH
50	23	20X50	83	3+3 (9)	40°	4	● PSD.14038R	● PSD.14038L
50	23	25X55	88	3+3 (9)	40°	4	■ PSD.14039R	■ PSD.14039L
50	23	20X50	83	4+4 (12)	40°	4	● PSD.14040R	● PSD.14040L
50	23	25X55	88	4+4 (12)	40°	4	■ PSD.14041R	■ PSD.14041L
50	28	20X50	88	3+3 (12)	40°	4	● PSD.14042R	● PSD.14042L
50	28	25X55	93	3+3 (16)	40°	4	■ PSD.14043R	■ PSD.14043L
50	28	20X50	93	4+4 (12)	40°	4	● PSD.14044R	● PSD.14044L
50	28	25X55	93	4+4 (16)	40°	4	■ PSD.14045R	■ PSD.14045L
50	38	20X50	98	3+3 (18)	40°	4	■ PSD.14046R	■ PSD.14046L
50	38	25X55	103	3+3 (24)	40°	4	■ PSD.14047R	■ PSD.14047L
50	38	20X50	98	4+4 (18)	40°	4	■ PSD.14048R	■ PSD.14048L
50	38	25X55	103	4+4 (24)	40°	4	■ PSD.14049R	■ PSD.14049L
60	50	20X50	98	4+4 (32)	40°	4	■ PSD.14050R	■ PSD.14050L
60	50	25X55	103	4+4 (32)	40°	4	■ PSD.14051R	■ PSD.14052L

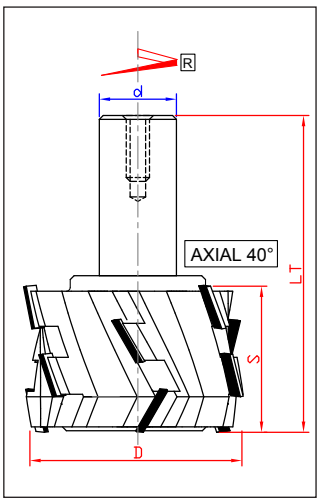

Z.3+3 RPM: 12000-18000 FEED/SPEED: 16-25 m/min
Z.4+4 RPM: 12000-18000 FEED/SPEED: 20-30 m/min

I DATI DI LAVORO SONO INDICATIVI - WORK DATA ARE INDICATIVE

DORIGO UTENSILI
DIAMOND & HARD METAL TOOLS

PUNTE PANTOGRAFO DOPPIA ROTAZIONE
3 PUNTI DI TAGLIO - 3 DIVISIONI - CORPO IN ACCIAIO
ROUTER BITS DOUBLE ROTATION
3 CUTTING POINT - 3 DIVISION- STEEL BODY

- PUNTE PANTOGRAFO DOPPIA ROTAZIONE DX/SX A 3 PUNTI DI TAGLIO CON 3 DIVISIONI, TAGLIENTI POSITIVI/NEGATIVI. INDICATE PER IL TAGLIO PANNELLI IN TRUCIOLARE MELAMINICO, GREZZO, LAMINATO, RIVESTIMENTO IMPIALLACCIATO. OTTIMA FINITURA SUL LATO INFERIORE E SUPERIORE. BASSA RUMOROSITÀ.
- *ROUTER BITS IN DIAMOND DOUBLE ROTATION LH/RH WITH 3 CUTTING POINT - 3 DIVISION , CUTTERS NEGATIVE/POSITIVE, SUITABLE FOR WORKING ON CHIPBOARD PANELS LAMINATED, VENEERING, MELAMINE. EXCELLENT FINISHING ON THE UPPER AND LOWER SIDE, LOW NOISINESS.*

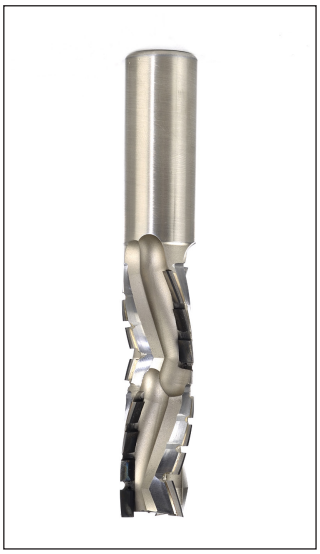

● = ready in stock ■ = delivery time 20 working day ▲ = on request

D	S1	S2	L	LT	Z	Z tot	H	CODE DX	CODE SX
20	25	25	20X50	120	3+3	9+9	4	■ PPD14312R	■ PPD14312L
20	30	30	20X50	130	3+3	11+11	4	■ PPD14313R	■ PPD14313L
25	25	25	25X55	125	3+3	9+9	4	■ PPD14314R	■ PPD14314L
25	30	30	25X55	135	3+3	11+11	4	■ PPD14315R	■ PPD14315L
25	35	35	25X55	145	3+3	13+13	4	■ PPD14316R	■ PPD14316L
25	40	40	25X55	155	3+3	15+15	4	■ PPD14317R	■ PPD14317L

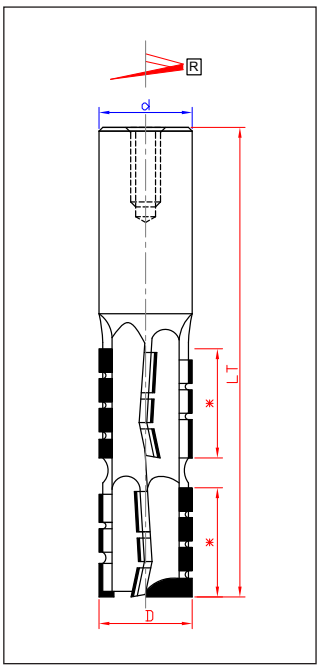

RPM: 18000-24000 FEED/SPEED: 12-20 m/min

I DATI DI LAVORO SONO INDICATIVI - WORK DATA ARE INDICATIVE

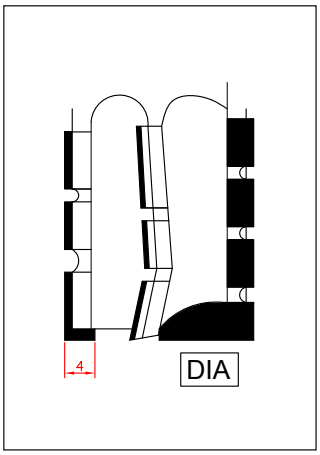

PUNTE PANTOGRAFO DOPPIA ROTAZIONE
2 PUNTI DI TAGLIO - 4 DIVISIONI - CORPO IN ACCIAIO
ROUTER BITS DOUBLE ROTATION
2 CUTTING POINT - 4 DIVISION- STEEL BODY

- PUNTE PANTOGRAFO DOPPIA ROTAZIONE DX/SX A 2 PUNTI DI TAGLIO CON 4 DIVISIONI, TAGLIENTI POSITIVI/NEGATIVI. INDICATE PER IL TAGLIO PANNELLI IN TRUCIOLARE MELAMINICO, GREZZO, LAMINATO, RIVESTIMENTO IMPIALLACCIATO. OTTIMA FINITURA SUL LATO INFERIORE E SUPERIORE. BASSA RUMOROSITÀ.
- *ROUTER BITS IN DIAMOND DOUBLE ROTATION LH/RH WITH 2 CUTTING POINT - 4 DIVISION, CUTTERS NEGATIVE/POSITIVE, SUITABLE FOR WORKING ON CHIPBOARD PANELS LAMINATED, VENEERING, MELAMINE. EXCELLENT FINISHING ON THE UPPER AND LOWER SIDE, LOW NOISINESS.*

● = ready in stock ■ = delivery time 20 working day ▲ = on request

D	S1	S2	d.	LT	Z.2	H	CODE RH	CODE LH
20	23	23	20X50	115	8+8+1 dia	4	■ PRD13605R	■ PRD13605L
20	28	28	20X50	120	10+10+1 dia	4	■ PRD13606R	■ PRD13606L
20	34	34	20X50	126	12+12+1 dia	4	■ PRD13607R	■ PRD13607L
25	28	28	25X55	125	10+10+1 dia	4	■ PRD13608R	■ PRD13608L
25	34	34	25X55	131	12+12+1 dia	4	■ PRD13609R	■ PRD13609L
25	40	40	25X55	137	14+14+1 dia	4	■ PRD136010R	■ PRD136010L

RPM: 18000-24000 FEED/SPEED: 10-12 m/min

I DATI DI LAVORO SONO INDICATIVI - WORK DATA ARE INDICATIVE

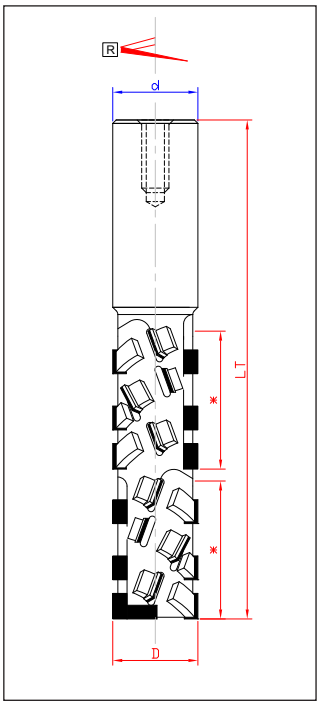

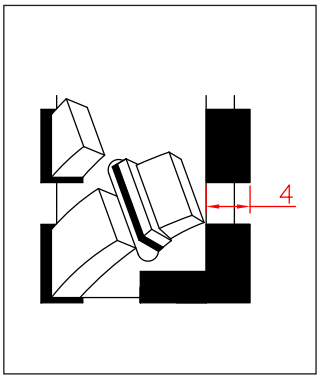

DORIGO UTENSILI
DIAMOND & HARD METAL TOOLS

PUNTE PANTOGRAFO NESTING CON ROMPITRUCIOLO
3 PUNTI DI TAGLIO - 6 DIVISIONI - CORPO IN DENSIMET

ROUTER BITS NESTING WITH CHIPBREAKER
3 CUTTING POINT - 6 DIVISION-BODY DENSIMET

- PUNTE PANTOGRAFO PER LAVORAZIONE NESTING CON CORPO SPECIALE IN ACCIAIO PESANTE, CON 3 PUNTI DI TAGLIO CON 6 DIVISIONI, TAGLIENTI POSITIVI/NEGATIVI. INDICATE PER IL TAGLIO PANNELLI IN TRUCIOLARE MELAMINICO, GREZZO, LAMINATO, RIVESTIMENTO IMPIALLACCIATO. OTTIMA FINITURA SUI LATI INFERIORE E SUPERIORE. ALTA VELOCITÀ DI AVANZAMENTO.

- *ROUTER BITS IN DIAMOND FOR NESTING WORK WITH SPECIAL HEAVY STEEL WITH 3 CUTTING POINT - 6 DIVISION, CUTTERS NEGATIVE/POSITIVE, SUITABLE FOR WORKING ON CHIPBOARD PANELS LAMINATED, VENEERING, MELAMINE. EXCELLENT FINISHING ON THE UPPER AND LOWER SIDE, HIGH FEEDING SPEED.*

● = ready in stock ■ = delivery time 20 working day ▲ = on request

D	L	d	LT	Z.3	H	CODE RH	CODE LH
12	19	12X40	65	9	3,5	● PXD1219126509R	● PXD1219126509L
12	22	12X40	70	12	3,5	● PXD1222127012R	● PXD1222127012L
12	24	12X40	70	12	3,5	● PXD1224127012R	● PXD1224127012L
12	29	12X40	75	15	3,5	● PXD1229127515R	● PXD1229127515L
14	24	16X50	80	12	3,5	● PXD1424168012R	● PXD1424168012L
14	29	16X50	85	15	3,5	● PXD1429168515R	● PXD1429168515L
14	35	16X50	91	18	3,5	● PXD1435169118R	● PXD1435169118L
16	24	16X50	80	12	3,5	● PXD1624168012R	● PXD1624168012L
16	29	16X50	85	15	3,5	● PXD1629168515R	● PXD1629168515L
16	35	16X50	91	18	3,5	● PXD1635169118R	● PXD1635169118L

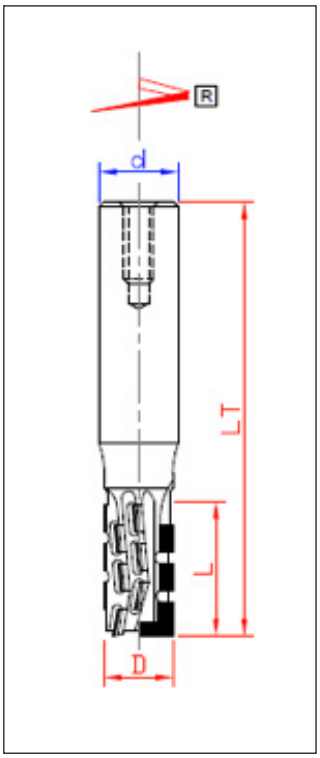

RPM: 18000-24000 FEED/SPEED: 15-20 m/min

I DATI DI LAVORO SONO INDICATIVI - WORK DATA ARE INDICATIVE

PUNTE PANTOGRAFO NESTING CON ROMPITRUCIOLO
3 PUNTI DI TAGLIO - 3 DIVISIONI - CORPO IN DENSIMET

ROUTER BITS NESTING WITH CHIPBREAKER
3 CUTTING POINT - 3 DIVISION-BODY DENSIMET

- PUNTE PANTOGRAFO PER LAVORAZIONE NESTING CON CORPO SPECIALE IN ACCIAIO PESANTE, CON 3 PUNTI DI TAGLIO CON 3 DIVISIONI, TAGLIENTI POSITIVI/NEGATIVI. INDICATE PER IL TAGLIO PANNELLI IN TRUCIOLARE MELAMINICO, GREZZO, LAMINATO, RIVESTIMENTO IMPIALLACCIATO. OTTIMA FINITURA SUI LATI INFERIORE E SUPERIORE. ALTA VELOCITÀ DI AVANZAMENTO.

- *ROUTER BITS IN DIAMOND FOR NESTING WORK WITH SPECIAL HEAVY STEEL WITH 3 CUTTING POINT - 3 DIVISION, CUTTERS NEGATIVE/POSITIVE, SUITABLE FOR WORKING ON CHIPBOARD PANELS LAMINATED, VENEERING, MELAMINE. EXCELLENT FINISHING ON THE UPPER AND LOWER SIDE, HIGH FEEDING SPEED.*

● = ready in stock ■ = delivery time 20 working day ▲ = on request

D	L	d	LT	Z.3	H	CODE RH	CODE LH
10	20	10X40	70	8+1 dia	3	■ PPD01.CCC08.301.R	■ PPD01.CCC08.301.L
10	27	10X40	75	9+1 dia	3	■ PPD02.CCC09.301.R	■ PPD02.CCC09.301.L
10	20	12X40	70	8+1 dia	3	■ PPD01.CCD08.301.R	■ PPD01.CCD08.301.L
10	27	12X40	75	10+1 dia	3	■ PPD02.CCD10.301.R	■ PPD02.CCD10.301.L
12	20	12X40	70	8+1 dia	3	● PPD01.DCD08.301.R	● PPD01.DCD08.301.L
12	27	12X40	75	10+1 dia	3	● PPD02.DCD10.306.R	● PPD02.DCD10.306.L
12	30	12X40	80	12+1 dia	3	● PPD03.DCD12.305.R	● PPD03.DCD12.305.L
12	35	12X40	85	14+1 dia	3	● PPD04.DCD14.301.R	● PPD04.DCD14.301.L
14	27	16X50	85	9+1 dia	3	■ PPD02.DCD09.306.R	■ PPD02.DCD09.306.L
14	35	16X50	95	13+1 dia	3	■ PPD04.DCD13.301.R	■ PPD04.DCD13.301.L
16	20	16X50	80	8+1 dia	4	■ PPD01.DCD08.301.R	■ PPD01.DCD08.301.L
16	27	16X50	85	9+1 dia	4	● PPD02.DCD09.306.R	● PPD02.DCD09.306.R
16	30	16X50	90	11+1 dia	4	● PPD03.DCD11.305.R	● PPD03.DCD11.305.L
16	35	16X50	95	13+1 dia	4	● PPD04.DCD13.301.R	● PPD04.DCD13.301.L

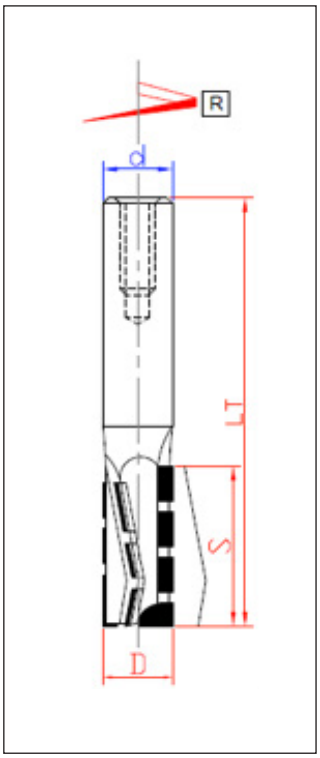

RPM: 18000-24000 FEED/SPEED: 12-15 m/min

I DATI DI LAVORO SONO INDICATIVI - WORK DATA ARE INDICATIVE

PUNTE PANTOGRAFO NESTING CON ROMPITRUCIOLO
3 PUNTI DI TAGLIO - 3 DIVISIONI - CORPO IN DENSIMET

ROUTER BITS NESTING WITH CHIPBREAKER
3 CUTTING POINT - 3 DIVISION-BODY DENSIMET

- PUNTE PANTOGRAFO PER LAVORAZIONE NESTING CON CORPO SPECIALE IN ACCIAIO PESANTE, CON 3 PUNTI DI TAGLIO CON 3 DIVISIONI, TAGLIENTI POSITIVI/NEGATIVI. INDICATE PER IL TAGLIO PANNELLI IN TRUCIOLARE MELAMINICO, GREZZO, LAMINATO, RIVESTIMENTO IMPIALLACCIATO. OTTIMA FINITURA SUI LATI INFERIORE E SUPERIORE. ALTA VELOCITÀ DI AVANZAMENTO.
- *ROUTER BITS IN DIAMOND FOR NESTING WORK WITH SPECIAL HEAVY STEEL WITH 3 CUTTING POINT - 3 DIVISION, CUTTERS NEGATIVE/POSITIVE, SUITABLE FOR WORKING ON CHIPBOARD PANELS LAMINATED, VENEERING, MELAMINE. EXCELLENT FINISHING ON THE UPPER AND LOWER SIDE, HIGH FEEDING SPEED.*

● = ready in stock ■ = delivery time 20 working day ▲ = on request

D	L	d	LT	Z.3	H	CODE RH	CODE LH
10	20	10X40	70	8+1 dia	3	■ PPD01.CCC08.301.R	■ PPD01.CCC08.301.L
10	27	10X40	75	9+1 dia	3	■ PPD02.CCC09.301.R	■ PPD02.CCC09.301.L
10	20	12X40	70	8+1 dia	3	■ PPD01.CCD08.301.R	■ PPD01.CCD08.301.L
10	27	12X40	75	10+1 dia	3	■ PPD02.CCD10.301.R	■ PPD02.CCD10.301.L
12	20	12X40	70	8+1 dia	3	■ PPD01.DCD08.301.R	■ PPD01.DCD08.301.L
12	27	12X40	75	10+1 dia	3	■ PPD02.DCD10.306.R	■ PPD02.DCD10.306.L
12	30	12X40	80	12+1 dia	3	■ PPD03.DCD12.305.R	■ PPD03.DCD12.305.L
12	35	12X40	85	14+1 dia	3	■ PPD04.DCD14.301.R	■ PPD04.DCD14.301.L
14	27	16X50	85	9+1 dia	3	■ PPD02.DCD09.306.R	■ PPD02.DCD09.306.L
14	35	16X50	95	13+1 dia	3	■ PPD04.DCD13.301.R	■ PPD04.DCD13.301.L
16	20	16X50	80	8+1 dia	4	■ PPD01.DCD08.301.R	■ PPD01.DCD08.301.L
16	27	16X50	85	9+1 dia	4	■ PPD02.DCD09.306.R	■ PPD02.DCD09.306.R
16	30	16X50	90	11+1 dia	4	■ PPD03.DCD11.305.R	■ PPD03.DCD11.305.L
16	35	16X50	95	13+1 dia	4	■ PPD04.DCD13.301.R	■ PPD04.DCD13.301.L

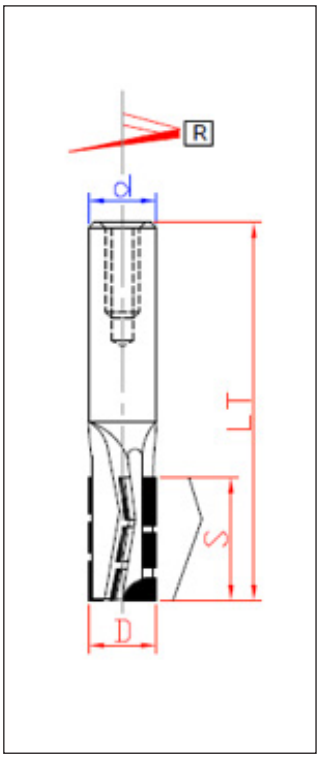

RPM: 18000-24000 FEED/SPEED: 12-15 m/min

I DATI DI LAVORO SONO INDICATIVI - WORK DATA ARE INDICATIVE

PUNTE PANTOGRAFO NESTING CON ROMPITRUCIOLO
3 PUNTI DI TAGLIO - 3 DIVISIONI - CORPO IN DENSIMET
ROUTER BITS NESTING WITH CHIPBREAKER
3 CUTTING POINT - 3 DIVISION-BODY DENSIMET

- PUNTE PANTOGRAFO PER LAVORAZIONE NESTING CON CORPO SPECIALE IN ACCIAIO PESANTE, CON 3 PUNTI DI TAGLIO CON 3 DIVISIONI, TAGLIENTI POSITIVI/NEGATIVI. INDICATE PER IL TAGLIO PANNELLI IN TRUCIOLARE MELAMINICO, GREZZO, LAMINATO, RIVESTIMENTO IMPIALLACCIATO. OTTIMA FINITURA SUI LATI INFERIORE E SUPERIORE. ALTA VELOCITÀ DI AVANZAMENTO.
- *ROUTER BITS IN DIAMOND FOR NESTING WORK WITH SPECIAL HEAVY STEEL WITH 3 CUTTING POINT - 3 DIVISION, CUTTERS NEGATIVE/POSITIVE, SUITABLE FOR WORKING ON CHIPBOARD PANELS LAMINATED, VENEERING, MELAMINE. EXCELLENT FINISHING ON THE UPPER AND LOWER SIDE, HIGH FEEDING SPEED.*

● = ready in stock ■ = delivery time 20 working day ▲ = on request

D	L	d	LT	Z.2	H	CODE RH	CODE LH
10	27	10X40	75	6+1dia	3	■ P4D01.CCD06.302.R	■ P4D01.CCD06.302.L
10	35	10X40	85	8+1dia	3	■ P4D02.CCD06.302.R	■ P4D02.CCD06.302.L
10	27	12X40	75	6+1dia	3	■ P4D01.CCD06.301.R	■ P4D01.CCD06.301.L
10	35	12X40	85	8+1dia	3	■ P4D02.CCD06.301.R	■ P4D02.CCD06.301.L
12	27	12X40	75	6+1dia	3	■ P4D01.DCD06.3A1.R	■ P4D01.DCD06.3A1.L
12	35	12X40	85	8+1dia	3	■ P4D02.DCD06.301.R	■ P4D02.DCD06.301.L
14	27	16X50	85	6+1dia	3	■ P4D01.DCD06.3A1.R	■ P4D01.DCD06.3A1.L
14	35	16X50	95	8+1dia	3	■ P4D02.DCD06.301.R	■ P4D02.DCD06.301.L
16	27	16X50	85	6+1dia	3	■ P4D01.DCD06.3A1.R	■ P4D01.DCD06.3A1.L
16	35	16X50	95	8+1dia	3	■ P4D02.DCD06.301.R	■ P4D02.DCD06.301.L

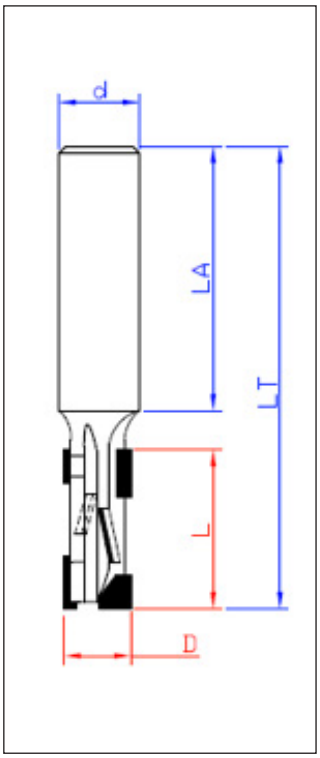

RPM: 18000-24000 FEED/SPEED: 10-12 m/min

I DATI DI LAVORO SONO INDICATIVI - WORK DATA ARE INDICATIVE

DORIGO UTENSILI
DIAMOND & HARD METAL TOOLS

PUNTA IN DIAMANTE - 1 PUNTO DI TAGLIO - CORPO IN HW

ROUTER BIT IN DIAMOND - 1 CUTTING POINT -BODY IN HARD METAL

- PUNTE IN DIAMANTE PER ESEGUIRE CANALI ,CON CORPO IN HM, INDICATE PER LA LAVORAZIONE DI PANNELLI IN TRUCIOLARE MELAMINICO, GREZZO, LAMINATO, RIVESTIMENTO IMPIALLACCIATO, LEGNI SENZA NODI E MATERIALI POLIMERICI, BASSA RUMOROSITÀ.
- *DIAMOND ROUTER BIT FOR GROOVING BODY IN HW, SUITABLE FOR WORKING ON CHIPBOARD PANELS LAMINATED, VENEERING, MELAMINE, SOLID WOOD, CORIAN-POLYMERS. EXCELLENT FINISHING, LOW NOISINESS.*

● = ready in stock ■ = delivery time 20 working day ▲ = on request

D	S	d	LT	AXIAL	Z	CODE RH	CODE LH
5	10	6X40	60	NEGATIVE	1	● PKD10.DC.R	● PKD10.DC.L
6	12	6X40	62	NEGATIVE	1	● PKD12.DC.R	● PKD12.DC.L
8	12	8X40	62	NEGATIVE	1	● PKD12.DC.R	● PKD12.DC.L
8	15	8X40	65	NEGATIVE	1	● PKD15.DC.R	● PKD15.DC.L
10	15	10X40	65	NEGATIVE	1	■ PKD15.DC.R	■ PKD15.DC.L
10	20	10X40	70	NEGATIVE	1	■ PKD20.DC.R	■ PKD20.DC.L
12	20	12X40	70	NEGATIVE	1	■ PKD20.DC.R	■ PKD20.DC.L
8	12	8X40	62	POSITIVE	1	■ PKD12.DC.R	■ PKD12.DC.L
8	15	8X40	65	POSITIVE	1	■ PKD15.DC.R	■ PKD15.DC.L
10	15	10X40	65	POSITIVE	1	■ PKD15.DC.R	■ PKD15.DC.L
10	20	10X40	70	POSITIVE	1	■ PKD20.DC.R	■ PKD20.DC.L
12	20	12X40	70	POSITIVE	1	■ PKD20.DC.R	■ PKD20.DC.L
8	12	8X40	62	0°	1	■ PKD12.DC.R	■ PKD12.DC.L
8	15	8X40	65	0°	1	■ PKD15.DC.R	■ PKD15.DC.L
10	15	10X40	65	0°	1	■ PKD15.DC.R	■ PKD15.DC.L
10	20	10X40	70	0°	1	■ PKD20.DC.R	■ PKD20.DC.L
12	20	12X40	70	0°	1	■ PKD20.DC.R	■ PKD20.DC.L

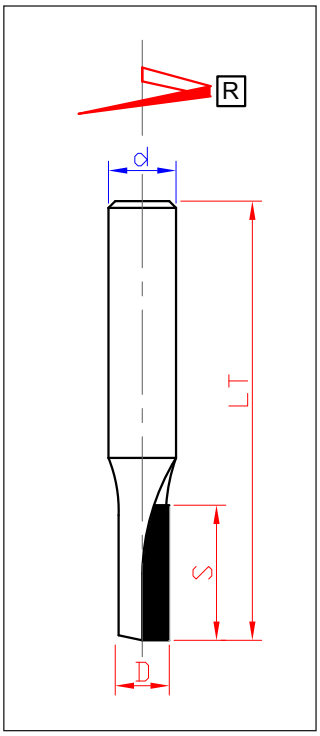

RPM: 20000-24000 FEED/SPEED: 2-4 m/min

I DATI DI LAVORO SONO INDICATIVI - WORK DATA ARE INDICATIVE

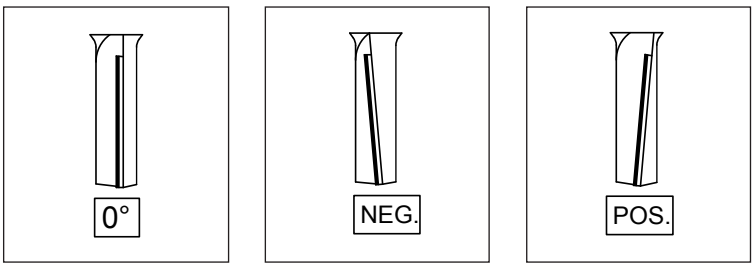

PUNTA IN DIAMANTE - 2 PUNTI DI TAGLIO - CORPO IN HW

ROUTER BITS IN DIAMOND - 2 CUTTING POINT -BODY IN HARD METAL

- PUNTE IN DIAMANTE PER ESEGUIRE CANALI ,CON CORPO IN HM, INDICATE PER LA LAVORAZIONE DI PANNELLI IN TRUCIOLARE MELAMINICO, GREZZO, LAMINATO, RIVESTIMENTO IMPIALLACCIATO, LEGNI SENZA NODI E MATERIALI POLIMERICI, BASSA RUMOROSITÀ.
- *DIAMOND ROUTER BIT FOR GROOVING BODY IN HW, SUITABLE FOR WORKING ON CHIPBOARD PANELS LAMINATED, VENEERING, MELAMINE, SOLID WOOD, CORIAN-POLYMERS. EXCELLENT FINISHING, LOW NOISINESS.*

● = ready in stock ■ = delivery time 20 working day ▲ = on request

D	S	d	LT	AXIAL	Z	CODE RH	CODE LH
8	12	8X40	62	NEGATIVE	2	● PKD12.FCC.R	■ PKD12.FCC.L
8	15	8X40	65	NEGATIVE	2	● PKD15.FCC.R	■ PKD15.FCC.L
10	15	10X40	65	NEGATIVE	2	● PKD15.FCC.R	● PKD15.FCC.L
10	20	10X40	70	NEGATIVE	2	● PKD20.FCC.R	● PKD20.FCC.L
12	20	12X40	70	NEGATIVE	2	● PKD20.FCC.R	● PKD20.FCC.L
8	12	8X40	62	POSITIVE	2	■ PKD12.FCC.R	■ PKD12.FCC.L
8	15	8X40	65	POSITIVE	2	■ PKD15.FCC.R	■ PKD15.FCC.L
10	15	10X40	65	POSITIVE	2	■ PKD15.FCC.R	■ PKD15.FCC.L
10	20	10X40	70	POSITIVE	2	■ PKD20.FCC.R	■ PKD20.FCC.L
12	20	12X40	70	POSITIVE	2	■ PKD20.FCC.R	■ PKD20.FCC.L
8	12	8X40	62	0°	2	■ PKD12.FCC.R	■ PKD12.FCC.L
8	15	8X40	65	0°	2	■ PKD15.FCC.R	■ PKD15.FCC.L
10	15	10X40	65	0°	2	■ PKD15.FCC.R	■ PKD15.FCC.L
10	20	10X40	70	0°	2	■ PKD20.FCC.R	■ PKD20.FCC.L
12	20	12X40	70	0°	2	■ PKD20.FCC.R	■ PKD20.FCC.L
8	12	8X40	62	POS/NEG	2	● PKD12.FCC.R	■ PKD12.FCC.L
8	15	8X40	65	POS/NEG	2	■ PKD15.FCC.R	■ PKD15.FCC.L
10	15	10X40	65	POS/NEG	2	● PKD15.FCC.R	■ PKD15.FCC.L
10	20	10X40	70	POS/NEG	2	■ PKD20.FCC.R	■ PKD20.FCC.L
12	20	12X40	70	POS/NEG	2	■ PKD20.FCC.R	■ PKD20.FCC.L

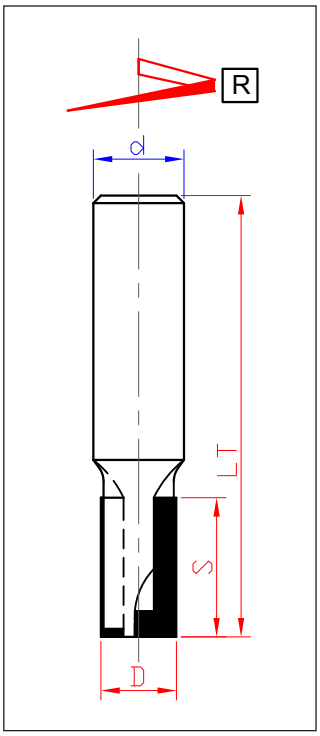

RPM: 20000-24000 FEED/SPEED: 3-6 m/min

I DATI DI LAVORO SONO INDICATIVI - WORK DATA ARE INDICATIVE

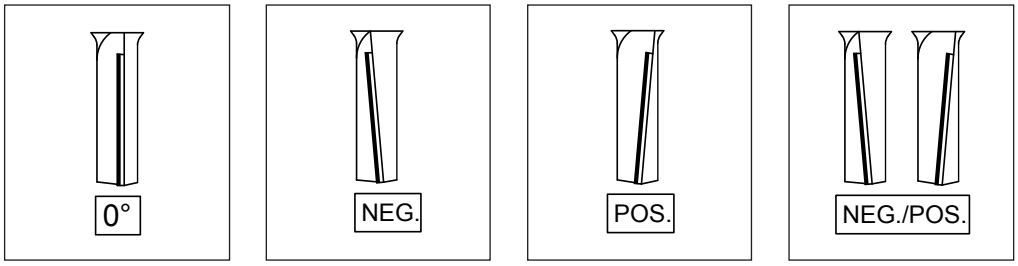

DORIGO UTENSILI
DIAMOND & HARD METAL TOOLS

PUNTA FORATRICE IN DIAMANTE PER FORI PASSANTI
DRILLING BIT IN DIAMOND FOR TROUGH HOLES

- PUNTA FORATRICE IN DIAMANTE PER FORI PASSANTI, INDICATA PER LA LAVORAZIONE DI FORATURA SU PANNELLI NOBILITATI, M.D.F. TRUCIOLARE, NOBILITATI.
- *DRILLING BIT IN DIAMOND FOR TROUGH HOLES, SUITABLE FOR DRILLING OUT HOLES ON LAMINATED, M.D.F. CHIPBOARD PANELS.*

● = ready in stock ■ = delivery time 20 working day ▲ = on request

D	S	d	LT	Z	H	CODE RH	CODE LH
5	28	10x20	57,5	1	4	■ FPD01.BCDAS.101.R	■ FPD01.BCDAS.101.L
6	28	10x20	57,5	1	4	■ FPD02.BCDAS.101.R	■ FPD02.BCDAS.101.L
7	28	10x20	57,5	2	4	■ FPD03.BCDAS.201.R	■ FPD03.BCDAS.201.L
8	28	10x20	57,5	2	4	■ FPD04.BCDAS.201.R	■ FPD04.BCDAS.201.L
9	28	10x20	57,5	2	4	■ FPD05.BCDAS.201.R	■ FPD05.BCDAS.201.L
10	28	10x20	57,5	2	4	■ FPD06.BCDAS.201.R	■ FPD06.BCDAS.201.L
11	28	10x20	57,5	2	4	■ FPD07.BCDAS.201.R	■ FPD07.BCDAS.201.L
12	28	10x20	57,5	2	4	■ FPD08.BCDAS.201.R	■ FPD08.BCDAS.201.L
5	40	10x30	70	1	4	■ FPD01.DCDES.101.R	■ FPD01.DCDES.101.L
6	40	10x30	70	1	4	■ FPD02.DCDES.101.R	■ FPD02.DCDES.101.L
7	40	10x30	70	2	4	■ FPD03.DCDES.201.R	■ FPD03.DCDES.201.L
8	40	10x30	70	2	4	■ FPD04.DCDES.201.R	■ FPD04.DCDES.201.L
9	40	10x30	70	2	4	■ FPD05.DCDES.201.R	■ FPD05.DCDES.201.L
10	40	10x30	70	2	4	■ FPD06.DCDES.201.R	■ FPD06.DCDES.201.L
11	40	10x30	70	2	4	■ FPD07.DCDES.201.R	■ FPD07.DCDES.201.L
12	40	10x30	70	0°	4	■ FPD08.DCDES.201.R	■ FPD08.DCDES.201.L

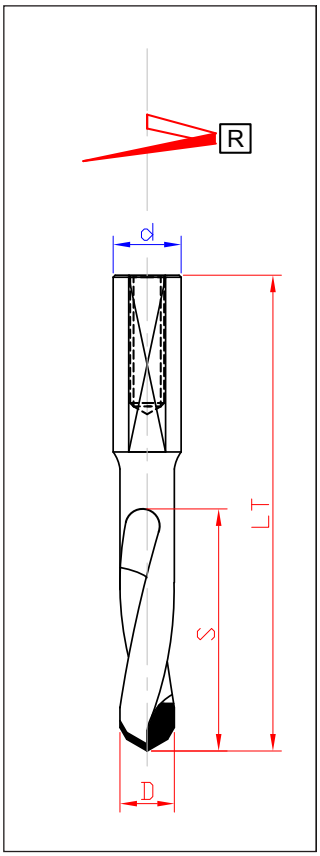

RPM: 4000-9000 FEED/SPEED: 0,2-1,8 m/min

I DATI DI LAVORO SONO INDICATIVI - WORK DATA ARE INDICATIVE

PUNTA FORATRICE IN DIAMANTE PER FORI CIECHI
DRILLING BIT IN DIAMOND FOR BLINDE HOLES

- PUNTA FORATRICE IN DIAMANTE PER FORI CIECHI, INDICATA PER LA LAVORAZIONE DI FORATURA SU PANNELLI NOBILITATI, M.D.F. TRUCIOLARE, NOBILITATI.
- *DRILLING BIT IN DIAMOND FOR BLINDE HOLES, SUITABLE FOR DRILLING OUT HOLES ON LAMINATED, M.D.F. CHIPBOARD PANELS.*

● = ready in stock ■ = delivery time 20 working day ▲ = on request

D	S	d	LT	Z	H	CODE RH	CODE LH
5	28	10x20	57,5	2	4	■ FCD01.BCDAS.101.R	■ FCD01.BCDAS.101.L
6	28	10x20	57,5	2	4	■ FCD02.BCDAS.101.R	■ FCD02.BCDAS.101.L
7	28	10x20	57,5	2	4	■ FCD03.BCDAS.201.R	■ FCD03.BCDAS.201.L
8	28	10x20	57,5	2	4	■ FCD04.BCDAS.201.R	■ FCD04.BCDAS.201.L
9	28	10x20	57,5	2	4	■ FCD05.BCDAS.201.R	■ FCD05.BCDAS.201.L
10	28	10x20	57,5	2	4	■ FCD06.BCDAS.201.R	■ FCD06.BCDAS.201.L
11	28	10x20	57,5	2	4	■ FCD07.BCDAS.201.R	■ FCD07.BCDAS.201.L
12	28	10x20	57,5	2	4	■ FCD08.BCDAS.201.R	■ FCD08.BCDAS.201.L
5	40	10x30	70	2	4	■ FCD01.DCDES.101.R	■ FCD01.DCDES.101.L
6	40	10x30	70	2	4	■ FCD02.DCDES.101.R	■ FCD02.DCDES.101.L
7	40	10x30	70	2	4	■ FCD03.DCDES.201.R	■ FCD03.DCDES.201.L
8	40	10x30	70	2	4	■ FCD04.DCDES.201.R	■ FCD04.DCDES.201.L
9	40	10x30	70	2	4	■ FCD05.DCDES.201.R	■ FCD05.DCDES.201.L
10	40	10x30	70	2	4	■ FCD06.DCDES.201.R	■ FCD06.DCDES.201.L
11	40	10x30	70	2	4	■ FCD07.DCDES.201.R	■ FCD07.DCDES.201.L
12	40	10x30	70	2	4	■ FCD08.DCDES.201.R	■ FCD08.DCDES.201.L

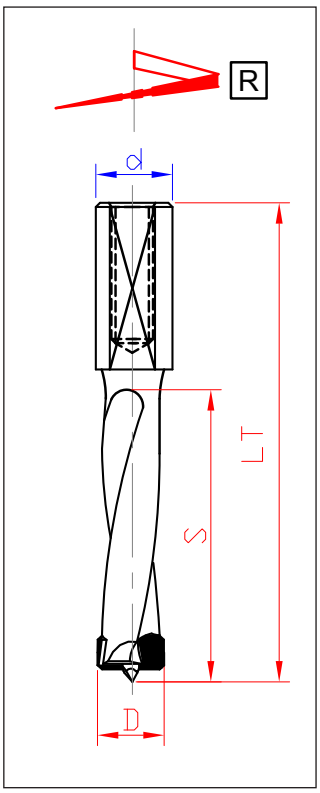

RPM: 4000-9000 FEED/SPEED: 1,0-2,0 m/min

I DATI DI LAVORO SONO INDICATIVI - WORK DATA ARE INDICATIVE

PUNTA FORATRICE IN DIAMANTE Z.2+2 COMPLETA DI SVASATORE PER FORI CECHI
DRILLING BIT IN DIAMOND WITH COUNTERSINK Z.2+2 BLINDE HOLES

- PUNTA FORATRICE IN DIAMANTE Z2+2, INDICATA PER LA LAVORAZIONE DI FORI SVASATI SU PANNELLI NOBILITATI, M.D.F. TRUCIOLARE, NOBILITATI.
- *DRILLING BIT IN DIAMOND Z2+2 SUITABLE FOR DRILLING OUT FLARED HOLES ON LAMINATED, M.D.F. CHIPBOARD PANELS.*

● = ready in stock ■ = delivery time 20 working day ▲ = on request

H	D	D1	S	LT	d	Z	CODE RH	CODE RH
4	8	12	15	57,5	10	2+2	■ FSD01	■ FSD01
4	8	13	15	57,5	10	2+2	■ FSD02	■ FSD02
4	8	15	15	57,5	10	2+2	■ FSD03	■ FSD03
4	8	20	20	57,5	10	2+2	■ FSD04	■ FSD04
4	10	12	15	57,5	10	2+2	■ FSD05	■ FSD05
4	10	13	15	57,5	10	2+2	■ FSD06	■ FSD06
4	10	15	15	57,5	10	2+2	■ FSD07	■ FSD07
4	10	20	20	57,5	10	2+2	■ FSD08	■ FSD08
4	8	12	15	70	10	2+2	■ FSD01	■ FSD01
4	8	13	15	70	10	2+2	■ FSD02	■ FSD02
4	8	15	15	70	10	2+2	■ FSD03	■ FSD03
4	8	20	20	70	10	2+2	■ FSD04	■ FSD04
4	10	12	15	70	10	2+2	■ FSD05	■ FSD05
4	10	13	15	70	10	2+2	■ FSD06	■ FSD06
4	10	15	15	70	10	2+2	■ FSD07	■ FSD07
4	10	20	20	70	10	2+2	■ FSD08	■ FSD08

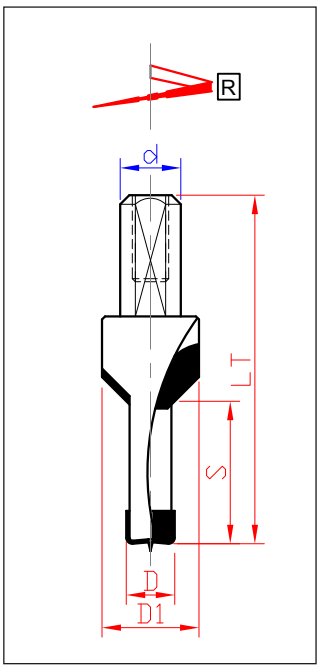

RPM: 4000-9000 FEED/SPEED: 0,2-1,8 m/min

I DATI DI LAVORO SONO INDICATIVI - WORK DATA ARE INDICATIVE

PUNTA FORATRICE IN DIAMANTE Z.2+2 DOPPIO DIAMETRO FORO CECO
DRILLING BIT IN DIAMOND WITH DOUBLE DIAMETER Z.2+2 BLINDE HOLES

- PUNTA FORATRICE IN DIAMANTE Z.2+2, INDICATA PER LA LAVORAZIONE DI DOPPIA FORATURA SU PANNELLI NOBILITATI, M.D.F. TRUCIOLARE, NOBILITATI.
- *DRILLING BIT IN DIAMOND Z.2+2 SUITABLE FOR DRILLING OUT DOUBLE HOLES ON LAMINATED, M.D.F. CHIPBOARD PANELS.*

● = ready in stock ■ = delivery time 20 working day ▲ = on request

H	D	D1	S	d	LT	Z	CODE RH	CODE LH
4	8	15	25	10x25	70	2+2	■ PDD01	■ PDD01
4	8	20	30	10x25	70	2+2	■ FSD02	■ FSD02
4	8	25	30	10x25	70	2+2	■ FSD03	■ FSD03
4	10	15	25	10x25	70	2+2	■ PDD01	■ PDD01
4	10	20	30	10x25	70	2+2	■ FSD02	■ FSD02
4	10	25	30	10x25	70	2+2	■ FSD03	■ FSD03

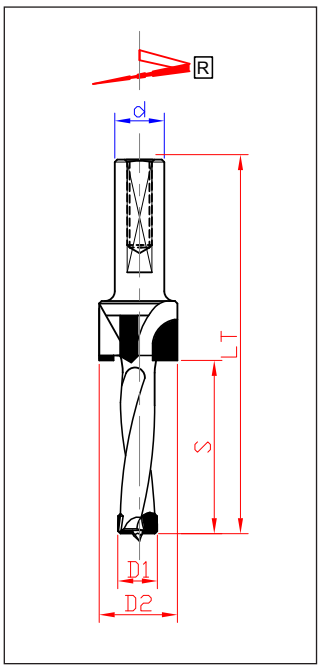

RPM: 4000-9000 FEED/SPEED: 0,2-1,8 m/min

I DATI DI LAVORO SONO INDICATIVI - WORK DATA ARE INDICATIVE

PUNTA PER FORI CERNIERA IN DIAMANTE
DRILLING BIT IN DIAMOND FOR HINGES HOLES

- PUNTA FORATRICE IN DIAMANTE PER FORI CERNIERA, INDICATA PER LA LAVORAZIONE DI FORATURA SU PANNELLI NOBILITATI, M.D.F. TRUCIOLARE, NOBILITATI.
- *DRILLING BIT IN DIAMOND FOR HINGES HOLES, SUITABLE FOR DRILLING OUT HOLES ON LAMINATED, M.D.F. CHIPBOARD PANELS.*

● = ready in stock ■ = delivery time 20 working day ▲ = on request

D	L	d	LT	Z	H	CODE RH	CODE LH
14	10X20	10X26	57,5	2+2	4	● CRD01.BB22.2601.R	● CRD01.BB22.2601.L
15	10X20	10X26	57,5	2+2	4	● CRD02.BB22.2601.R	● CRD02.BB22.2601.L
16	10X20	10X26	57,5	2+2	4	■ CRD03.BB22.2601.R	■ CRD03.BB22.2601.L
17	10X20	10X26	57,5	2+2	4	■ CRD04.BB22.2601.R	■ CRD04.BB22.2601.L
18	10X20	10X26	57,5	2+2	4	■ CRD05.BB22.2601.R	■ CRD05.BB22.2601.L
20	10X20	10X26	57,5	2+2	4	■ CRD06.BB22.2601.R	■ CRD06.BB22.2601.L
22	10X20	10X26	57,5	2+2	4	■ CRD07.BB22.2601.R	■ CRD07.BB22.2601.L
24	10X20	10X26	57,5	2+2	4	■ CRD08.BB22.2601.R	■ CRD08.BB22.2601.L
25	10X20	10X26	57,5	2+2	4	■ CRD09.BB22.2601.R	■ CRD09.BB22.2601.L
26	10X20	10X26	57,5	2+2	4	■ CRD10.BB22.2601.R	■ CRD10.BB22.2601.L
28	10X20	10X26	57,5	2+2	4	■ CRD11.BB22.2601.R	■ CRD11.BB22.2601.L
30	10X20	10X26	57,5	2+2	4	■ CRD12.BB22.2601.R	■ CRD12.BB22.2601.L
35	10X20	10X26	57,5	2+2	4	● CRD13.BB22.2601.R	● CRD13.BB22.2601.L
14	10X20	10X26	70	2+2	4	● CRD01.DB22.2601.R	● CRD01.DB22.2601.L
15	10X20	10X26	70	2+2	4	● CRD02.DB22.2601.R	● CRD02.DB22.2601.L
16	10X20	10X26	70	2+2	4	■ CRD03.DB22.2601.R	■ CRD03.DB22.2601.L
17	10X20	10X26	70	2+2	4	■ CRD04.DB22.2601.R	■ CRD04.DB22.2601.L
18	10X20	10X26	70	2+2	4	■ CRD05.DB22.2601.R	■ CRD05.DB22.2601.L
20	10X20	10X26	70	2+2	4	■ CRD06.DB22.2601.R	■ CRD06.DB22.2601.L
22	10X20	10X26	70	2+2	4	■ CRD07.DB22.2601.R	■ CRD07.DB22.2601.L
24	10X20	10X26	70	2+2	4	■ CRD08.DB22.2601.R	■ CRD08.DB22.2601.L
25	10X20	10X26	70	2+2	4	● CRD09.DB22.2601.R	● CRD09.DB22.2601.L
26	10X20	10X26	70	2+2	4	■ CRD10.DB22.2601.R	■ CRD10.DB22.2601.L
28	10X20	10X26	70	2+2	4	■ CRD11.DB22.2601.R	■ CRD11.DB22.2601.L
30	10X20	10X26	70	2+2	4	■ CRD12.DB22.2601.R	■ CRD12.DB22.2601.L
35	10X20	10X26	70	2+2	4	● CRD13.DB22.2601.R	● CRD13.DB22.2601.L

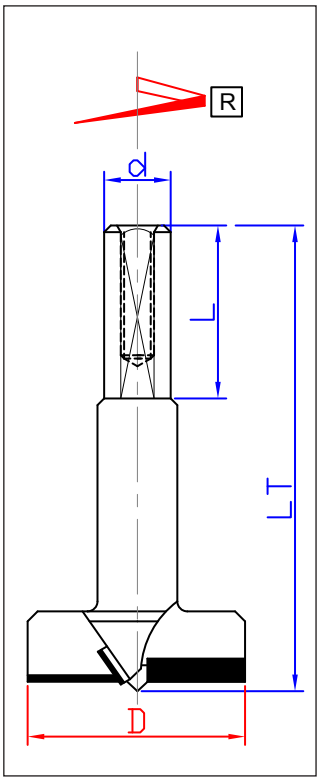

RPM: 3000-6000 FEED/SPEED: 1,0-2,0 m/min

I DATI DI LAVORO SONO INDICATIVI - WORK DATA ARE INDICATIVE

FRESA IN DIAMANTE CON ATTACO PER SPIANARE PIANI CNC IN MDF

JCUTTERS IN DIAMOND SUITABLE TO LEVEL OUT PANEL SURFACES ON CNC MACHINES

- FRESA IN DIAMANTE PER ESEGUIRE LAVORI DI SPIANATURA SU PIANI MDF.
- *CUTTERS IN DIAMOND SUITABLE TO LEVEL OUT PANEL SURFACES ON CNC MACHINES.*

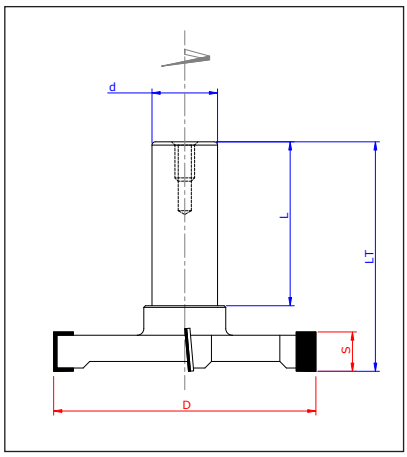

● = ready in stock ■ = delivery time 20 working day ▲ = on request

D	L	d	LT	Z	H	CODE
60	13	12X40	80	3	4	■ PSD.60131234
60	13	20X50	80	3	4	■ PSD.60132034
60	13	20X50	80	4	4	■ PSD.60132044
80	13	20X50	80	3	4	■ PSD.80132034
80	13	20X50	80	4	4	■ PSD.80132044
100	13	20X50	85	3	4	■ PSD.100132034
100	13	20X50	85	4	4	■ PSD.100132044
100	13	20X50	85	6	4	■ PSD.100132064

COLTELLI IN DIAMANTE STANDARD
KNIVES IN DIAMOND STANDARD

- COLTELLI IN DIAMANTE POLICRISTALLINO, IDEALI PER LAVORAZIONI DI TRUCIOLARE, MDF, MULTISTRATO, LEGNI ESOTICI, PLEXIGLAS E MATERIE PLASTICHE.
- *KNIVES IN DIAMOND, SUITABLE FOR WORKING ON CHIPBOARD PANELS, M.D.F., PLYWOOD, PLEXIGLAS AND PLASTIC MATERIAL*

● = ready in stock ■ = delivery time 20 working day ▲ = on request

L	H	S	d	degree°	Z	CODE
7,5	12	1,5	1	35	2	● CLD015075012
7,65	12	1,5	1	35	2	● CLD0150765012
9,6	12	1,5	1	35	2	● CLD015096012
12	12	1,5	1	35	2	● CLD015012012
15	12	1,5	1	35	2	● CLD015015012
20	12	1,5	1	35	2	● CLD015020012
25	12	1,5	2	35	2	● CLD015025012
30	12	1,5	2	35	2	● CLD015030012
40	12	1,5	2	35	2	● CLD015040012
50	12	1,5	2	35	2	● CLD015050012
60	12	1,5	2	35	2	● CLD015060012

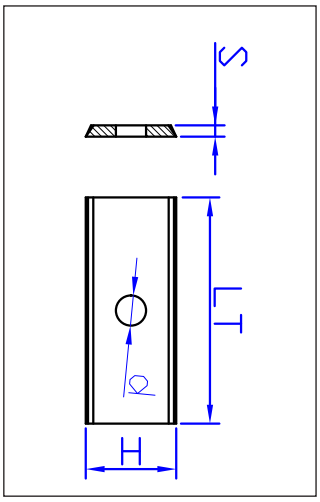

FRESA IN DIAMANTE PER CAVE SERRATURE DI PORTE
3 PUNTI DI TAGLIO - CORPO IN DENSIMET
SHANK CUTTERS IN DIAMOND
3 CUTTING POINT - BODY DENSIMET

- FRESE PER PANTOGRAFO ELICOIDALE, IDEALE PER LA LAVORAZIONE DI SCASSO SERRATURA, CONSIGLIATE SU MATERIALI COME MDF, TRUCIOLARE, TRUCIOLARE LAMINATO.
- *DIAMOND SHANK CUTTERS FOR MACHINING DOOR LOCK WITH BODY ANTI-VIBRATION IN DENSIMET. SUITABLE FOR WORKING MATERIAL MDF, CHIPBOARD PANELS LAMINATED.*

● = ready in stock ■ = delivery time 20 working day ▲ = on request

D.	S	d	LT	AXIAL	Z	CODE RH	CODE LH
14	15	14X50	150	NEGATIVE	3	■ PSD 13407R	■ PSD 13407L
16	15	16X50	150	NEGATIVE	3	■ PSD 13408R	■ PSD 13408L

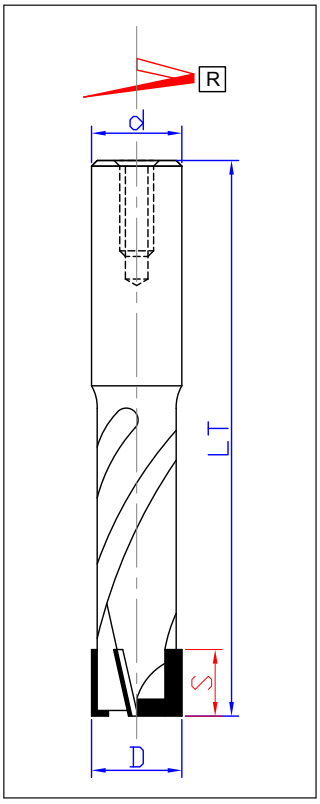

DORIGO UTENSILI
DIAMOND & HARD METAL TOOLS

UTENSILI SPECIALI IN DIAMANTE SU RICHIESTA
SPECIAL TOOLS IN DIAMOND ON REQUEST

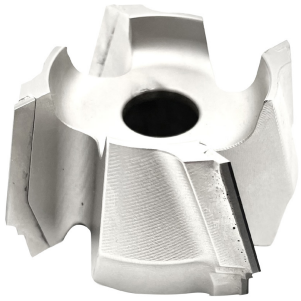

UTENSILI SPECIALI IN DIAMANTE SU RICHIESTA
SPECIAL TOOLS IN DIAMOND ON REQUEST

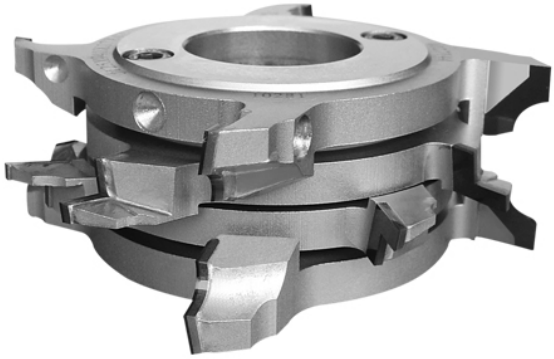

FRESE SAGOMATE IN DIAMANTE - UTENSILI PER PAVIMENTI
DIAMOND SHAPED MILLING CUTTERS - TOOLS FOR FLOORING

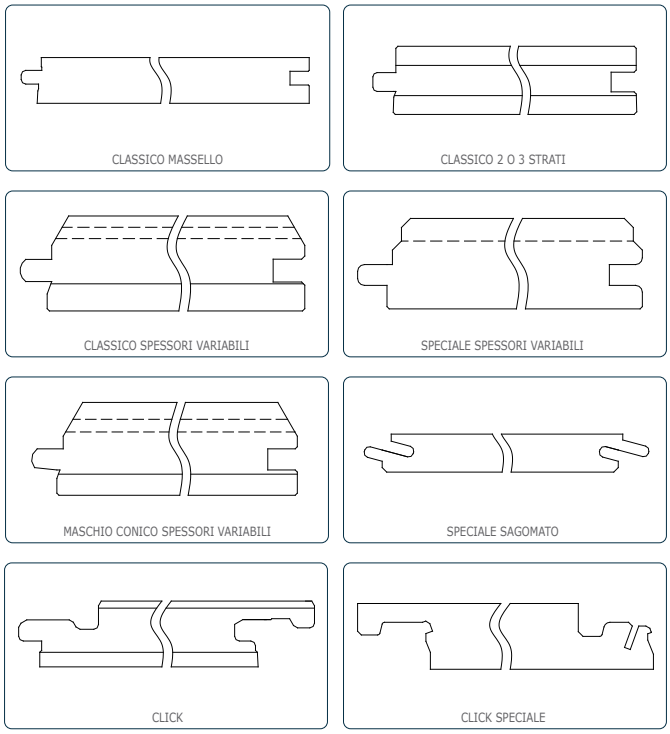

ESEMPI INCASTRO "MASCHIO" / "FEMMINA"

Per la lavorazione di profili sagomati su disegno del cliente, Dorigo Utensili è in grado di costruire frese a profilo con PL. intere o frazionate.

Si costruiscono frese adatte alle lavorazioni nel campo dell'hobbistica, dell'occhialeria, dell'industria del mobile per tutte le macchine più comunemente usate: toupie, scorniciatrici, bordatrici, pantografi portatili manuali e tutta la più vasta gamma di centri di lavoro complessi.

Si eseguono su richiesta del cliente utensili per l'esecuzione dei singoli raggi concavi o convessi, per profili sagomati semplici o complessi, attrezzaggi per le lavorazioni di pre-forming e post-forming e kit per la costruzione di porte ed antine.

La vasta gamma e tipologia di frese sagomate varia per caratteristiche essendo appositamente studiate per l'utilizzo su ogni singolo materiale: compensati, multistrati, pannelli grezzi di truciolare e MDF (anche rivestiti di PVC, melamina, carta), HPL, materie plastiche (anche caricate con fibre di vetro), calcestruzzo poroso, pannelli in agglomerati minerali (ad esempio corian) e fibre minerali.

Per le **lavorazioni di pavimenti**, grezzi e prefiniti, la Dorigo Utensili si avvale di una lunga e consolidata esperienza nel settore, acquisita nel corso degli anni attraverso la collaborazione con costruttori di macchine e con le industrie produttrici di pavimenti in legno, stratificati, MDF rivestiti (nobilitati, laminati, ecc.) e in materiali sintetici.

Propone tipologie di utensili dai più semplici gruppi registrabili (attrezzature per macchine con uno o due alberi) ad attrezzaggi completi di linee longitudinali e trasversali per l'esecuzione del pavimento "maschio" e "femmina" su misura, a campione o a disegno del cliente per tutte le esigenze di finitura ed avanzamenti fino a 120 m/min.

For the machining of shaped profiles on customer design, Dorigo Utensili is able to build profile milling cutters with whole or split PL.

We build milling cutters suitable for the fields of hobbies, eyewear, furniture industry for all the most commonly used machines: wood shapers, moulding machines, flanging machines, portable manual pantographs and the whole range of complex machining centers.

On request of the customer, we can produce tools to make individual concave or convex rays, for simple and complex shaped profiles, tools for pre-forming and post-forming machining and kits for the construction of doors and cabinet doors. The wide range of shaped milling cutters offers different characteristics studied for every single material: plywood, multilayer panels, raw chipboard and MDF panels (also coated with PVC, melamine, paper), HPL, plastics (also loaded with glass fibers), porous concrete, agglomerated minerals (for example corian) and mineral fibers.

Dorigo Utensili can rely on a long and consolidated experience in the sector of **machining of pre-finished and raw flooring**, gained over the years through the collaboration with machine manufacturers and companies producing wood, multi-layer, MDF (faced, laminated etc..) and synthetic floorings.

We offer different types of tools, from the simplest adjustable groups (equipment for machines with one or two shafts) to the complete longitudinal and transverse lines to make "mortice" and "tenon" floors on customer's sample or drawing. We are able to meet all the needs for finishing and feeds up to 120 m/min.

SPECIFICAZIONI E DISEGNI

I prodotti sono soggetti a continue innovazioni tecnologiche, e Dorigo Utensili s.r.l. si riserva il diritto di apportare le modifiche e i miglioramenti ritenuti opportuni senza incorrere in alcun tipo di obbligazioni per quelli già forniti. Verrà fatto tutto il possibile affinché le descrizioni, i disegni e le altre informazioni nel presente catalogo siano accurati. Dorigo Utensili s.r.l. non si assume alcuna responsabilità per eventuali inesattezze riscontrate.

TUTELA DEL DIRITTO D'AUTORE E DELLA PROPRIETA' INDUSTRIALE

Il presente catalogo e le informazioni in esso contenute, quali nomi, ditte, ragioni e denominazioni sociali, immagini e fotografie dei prodotti, testi e descrizioni tecniche, brevetti, loghi e marchi, sono di esclusiva proprietà di Dorigo Utensili s.r.l. Nessun altro soggetto è titolare di licenze o di diritti di utilizzo e sfruttamento dei predetti beni. Non è consentita alcuna loro utilizzazione e/o riproduzione, in qualunque forma e con ogni mezzo, anche parziale, senza il preventivo consenso scritto della titolare. Qualsiasi violazione ai diritti di esclusiva di cui sopra, è perseguibile da Dorigo Utensili s.r.l. in forza della normativa vigente in materia di protezione della proprietà industriale, di diritto d'autore e di concorrenza sleale.

SPECIFICATIONS AND DRAWINGS

The products are subject to continuous technological innovations and Dorigo Utensili s.r.l. reserves the right to make changes and improvements deemed appropriate without incurring any obligations to those already provided. We will do everything possible to ensure that the descriptions, drawings and other information in this catalogue are accurate. Dorigo Utensili S.r.l. assumes no responsibility for any inaccuracies.

PROTECTION OF COPYRIGHT AND INDUSTRIAL PROPERTY

This catalogue and the information contained in it, such as names, companies, company titles and corporate names, images and product photos, texts and technical descriptions, patents, trademarks and logos are the exclusive property of Dorigo Utensili s.r.l. No other person is the holder of licenses or rights of use and exploitation of such property. It is not allowed to use and/or reproduce them in any form and by any means, even partially, without the prior written consent of the owner. Any violation of the exclusive rights listed above is punishable by Dorigo Utensili s.r.l. under the legislation in force concerning the protection of industrial property, copyright and unfair competition.

DORIGO UTENSILI
DIAMOND & HARD METAL TOOLS

DORIGO UTENSILI s.r.l.
Costruzione e Affilatura Utensili
Commercio Macchine per la Lavorazione del Legno
Coordinata da Industrial Partner s.r.l.
Viale Europa 41 - 31010 Farra Di Soligo (Treviso) - ITALY
R.E.A. di Treviso N.138969
Reg. Imprese di Treviso n. 00717160261
Codice Fiscale e Partita IVA 00717160261
Capitale Sociale Euro 10.330,00 i.v.
tel. 0438 980302-837427 - fax 0438 982349
www.dorigoutensili.it

DORIGO UTENSILI
DIAMOND & HARD METAL TOOLS

DORIGO UTENSILI s.r.l.
Tools Construction and Sharpening
Sale of Machines for Woodworking
Coordinated by Industrial Partner s.r.l.
Viale Europa 41 - 31010 Farra Di Soligo (Treviso) - ITALY
Economic Administrative Index (R.E.A.) of Treviso N.138969
Register of Companies of Treviso n. 00717160261
Tax Code No. and VAT Registration No. 00717160261
Share Capital of 10.330,00 € fully paid up
tel. 0438 980302-837427 - fax 0438 982349
www.dorigoutensili.it

CONDIZIONI GENERALI DI VENDITA

ORDINI: Tutti gli ordini di nostri prodotti si intendono accettati esclusivamente ai prezzi ed alle condizioni di vendita in vigore al momento dell'ordine, pertanto ogni conferimento di un ordine o l'accettazione di un'offerta vale come espressa ed integrale accettazione di Condizioni Generali di Vendita, senza riserva di sorta, salvo eventuali deroghe che siano confermate per iscritto da Dorigo Utensili S.r.l. Per quanto non previsto dalle Condizioni Generali di Vendita valgono le norme del Codice Civile Italiano. L'emissione e l'invio della conferma d'ordine ratifica l'avvenuta formale accettazione dell'ordinazione ed il contestuale inserimento dell'ordine stesso nei piani di produzione e/o di consegna, pertanto non potranno essere accettate variazioni di qualsiasi genere né annullamenti parziali o totali dell'ordine trascorsi tre giorni dalla data di ricevimento da parte di Dorigo Utensili S.r.l.

PREZZI: Il prezzo indicato sui listini Dorigo Utensili S.r.l., offerte commerciali o conferme d'ordine è quotato al netto in euro,; si intende fisso ed invariabile per merce resa "franco proprio stabilimento", I.V.A. esclusa. L'aliquota I.V.A. sarà quella in vigore nel giorno della spedizione. I prezzi indicati hanno carattere esclusivamente indicativo e non impegnano in alcun modo Dorigo Utensili S.r.l. che si riserva il diritto di apportare agli stessi variazioni adeguate agli aumenti di costo della mano d'opera, delle materie prime e degli altri elementi di costo che si fossero verificati nel corso del contratto e fino al giorno della spedizione

TERMINI DI CONSEGNA: I termini di consegna indicati nella conferma d'ordine hanno carattere puramente indicativo e sono comunicati senza garanzia. Se accettati sono validi in normali condizioni di lavoro, salvo casi fortuiti di forza maggiore od imprevisti non imputabili a dolo o colpa grave della Dorigo Utensili S.r.l. Il mancato rispetto dei termini indicati non pregiudica la validità dell'ordine né costituisce motivo plausibile di annullamento totale o parziale dell'ordine. Nessuna responsabilità di ordine patrimoniale o d'altro genere affine, potrà essere imputata a Dorigo Utensili S.r.l. qualora dovessero verificarsi ritardi nelle consegne e/o nei trasporti.

SPEDIZIONI: La merce viaggia sempre per conto, a rischio e pericolo del committente salvo disposizioni contrarie, le consegne si intendono sempre "franco nostro stabilimento" anche se la merce è venduta franco destino. L'imballo sarà fatturato al costo.

PAGAMENTI: La fatturazione dei prodotti verrà effettuata a seguito della consegna. Il Compratore non potrà in alcun modo e per alcun motivo sospendere o ritardare i pagamenti dovuti per effetto elle forniture ricevute neppure eccependo in compensazione un eventuale controcredito vantato nei confronti di Dorigo Utensili S.r.l. In caso di ritardo, le somme dovute comporteranno, di pieno diritto, l'addebito di interessi sulla base del tasso legale maggiorato di quattro punti. Qualsiasi reclamo o contestazione non da diritto al Compratore di sospendere il pagamento delle fatture. In caso di mancato rispetto dei termini di pagamento, indipendentemente dalla somma dovuta, Dorigo Utensili S.r.l. avrà diritto di disporre l'immediata sospensione delle forniture e/o la risoluzione della fornitura ai sensi dell'art. 1456 del Codice Civile, fatto salvo ogni altro rimedio di legge e/o previsto dalle presenti condizioni generali.

RISERVA DI PROPRIETÀ: La merce viene venduta con riserva di proprietà finché non sarà effettuato il pagamento dell'intero prezzo da parte del Compratore ai sensi dell'art. 1523 Codice Civile.

GARANZIA: Il venditore garantisce i prodotti venduti per un anno dalla data di consegna. Il Compratore dovrà denunciare per iscritto a Dorigo Utensili S.r.l. la presenza di vizi e/o difetti entro otto giorni dalla consegna dei prodotti, se si tratta di difetti palesi; oppure entro otto giorni dalla scoperta in caso di vizi e/o difetti occulti o non facilmente rilevabili. La garanzia è limitata alla riparazione o sostituzione gratuita dei pezzi riconosciuti come difettosi da parte di Dorigo Utensili S.r.l.; le verifiche per il riconoscimento della garanzia saranno sempre eseguite presso lo stabilimento del venditore; a questo scopo il materiale contestato dovrà essere inviato in tale luogo in "porto franco" e dopo l'intervento verrà restituito al Compratore in "porto assegnato" essendo le spese di trasporto in ogni caso a carico del Compratore.. La garanzia esclude prioritariamente l'obbligo di risarcire danni diretti e/o indiretti conseguenti all'impiego del prodotto Dorigo Utensili S.r.l. anche nel caso di rottura, anche se ciò dovesse causare danni a persone e/o cose, né potranno essere reclamati danni diretti o indiretti di qualsiasi natura compreso anche per il temporaneo non uso della merce acquistata nonché le perdite derivanti dall'inattività del Compratore o il mancato guadagno. Deve intendersi escluso dalla garanzia qualsiasi danneggiamento conseguente dall'impiego improprio o colposo od in contrasto con i limiti di impiego dettati dalle norme e/o riportati sui cataloghi e/o sui documenti tecnici Dorigo Utensili S.r.l. La garanzia decade per i prodotti comunque riparati e/o modificati anche parzialmente sia da parte del Compratore che da soggetti terzi senza la preventiva autorizzazione scritta di Dorigo Utensili S.r.l. La garanzia è inoltre esclusa nel caso di una affilatura inidonea, usura ordinaria e/o installazione non corretta. Il reclamo non potrà mai dar luogo all'annullamento od alla riduzione delle ordinazioni o alla sospensione dei pagamenti da parte del Compratore.

RESI: Non si accettano resi di merce se non precedentemente autorizzati per iscritto da parte di Dorigo Utensili S.r.l.

LEGGE APPLICABILE E FORO COMPETENTE: Tutte le forniture fra Dorigo Utensili S.r.l. e il Compratore saranno sottoposte alla legge italiana. Il foro competente per qualsiasi controversia è esclusivamente quello di Treviso, senza possibilità di alcuna modificazione.

ACCETTAZIONE CONDIZIONI GENERALI DI VENDITA: Le presenti condizioni generali di vendita si intendono accettate anche se non sottoscritte, con il ricevimento della conferma d'ordine.

GENERAL CONDITIONS OF SALE:

ORDERS: All orders for our products are understood to be accepted exclusively at the prices and conditions of sale in force at the time of the order, therefore any placing of an order or acceptance of an offer is considered an express and full acceptance of the General Conditions of Sale, without reservation of any kind, except for any exceptions that are confirmed in writing by Dorigo Utensili Srl For anything not provided for by the General Conditions of Sale, the rules of the Italian Civil Code apply. The issue and sending of the order confirmation ratifies the formal acceptance of the order and the contextual insertion of the order itself in the production and / or delivery plans, therefore variations of any kind or cancellations cannot be accepted. partial or total of the order after three days from the date of receipt by Dorigo Utensili Srl

PRICES: The price indicated on the Dorigo Utensili S.r.l. price lists, commercial offers or order confirmations is quoted net in euros; is intended as fixed and invariable for goods delivered "ex works", I.V.A. excluded. The VAT rate will be the one in force on the day of shipment. The prices indicated are purely indicative and do not bind Dorigo Utensili S.r.l. in any way. which reserves the right to make appropriate changes to the increases in the cost of labor, raw materials and other cost elements that occurred during the contract and up to the day of shipment

DELIVERY TERMS: The delivery terms indicated in the order confirmation are valid
purely indicative and are communicated without guarantee. If accepted, they are valid in normal working conditions, except for fortuitous cases of force majeure or unforeseen events not attributable to willful misconduct or gross negligence of Dorigo Utensili S.r.l. Failure to comply with the terms indicated does not affect the validity of the order nor does it constitute a plausible reason for total or partial cancellation of the order. No liability for patrimonial or other similar nature can be attributed to Dorigo Utensili S.r.l. should there be delays in deliveries and / or transport.

SHIPPING: The goods always travel on behalf, at the risk and peril of the customer unless otherwise specified, deliveries are always intended "ex our factory" even if the goods are sold carriage paid. The packaging will be invoiced at cost.

PAYMENTS: The billing of the products will be made following delivery. The Buyer may not in any way and for any reason suspend or delay payments due as a result of the supplies received, not even by pleading as compensation any counter-credit due to Dorigo Utensili S.r.l. In case of delay, the sums due will entail, by right, the charge of interest based on the legal rate plus four points. Any complaint or dispute does not entitle the Buyer to suspend payment of invoices. In case of non-compliance with the payment terms, regardless of the amount due, Dorigo Utensili S.r.l. will have the right to order the immediate suspension of supplies and / or the termination of the supply pursuant to art. 1456 of the Civil Code, without prejudice to any other legal remedy and / or provided for by these general conditions.

RESERVATION OF OWNERSHIP: The goods are sold with retention of title until payment of the full price is made by the Buyer pursuant to art. 1523 of the Civil Code.

WARRANTY: The seller guarantees the products sold for one year from the date of delivery. The Buyer must report in writing to Dorigo Utensili S.r.l. the presence of flaws and / or defects within eight days of delivery of the products, in the case of obvious defects; or within eight days of discovery in case of hidden or not easily detectable defects and / or faults. The warranty is limited to the repair or free replacement of parts recognized as defective by Dorigo Utensili S.r.l .; the checks for the recognition of the guarantee will always be carried out at the seller's factory; for this purpose, the disputed material must be sent to that place in "free port" and after the intervention it will be returned to the Buyer in "carriage forward" being the transport costs in any case borne by the Buyer. The guarantee primarily excludes '' obligation to compensate direct and / or indirect damages resulting from the use of the Dorigo Utensili Srl product even in the event of breakage, even if this causes damage to persons and / or things, nor can direct or indirect damages of any nature be claimed, including for the temporary non-use of the goods purchased as well as losses resulting from the inactivity of the Buyer or loss of earnings. Any damage resulting from improper or negligent use or in contrast with the limits of use dictated by the standards and / or reported in the catalogs and / or technical documents Dorigo Utensili S.r.l. The warranty is void for products repaired and / or modified, even partially, both by the Buyer and by third parties without the prior written authorization of Dorigo Utensili S.r.l. The warranty is also excluded in the event of unsuitable sharpening, ordinary wear and / or incorrect installation. The complaint will never give rise to the cancellation or reduction of orders or the suspension of payments by the Buyer.

RETURNS: Returns of goods are not accepted unless previously authorized in writing by Dorigo Utensili S.r.l.

APPLICABLE LAW AND COMPETENT COURT: All supplies between Dorigo Utensili S.r.l. and the Buyer will be subject to Italian law. The place of jurisdiction for any dispute is exclusively that of Treviso, without the possibility of any modification.

ACCEPTANCE OF GENERAL SALES CONDITIONS: These general conditions of sale are understood to be accepted even if not signed, upon receipt of the order confirmation.

TECNOLOGIA
PRODOTTI
VENDITA
SUPPORTO

Le armi vincenti sono la **qualità del prodotto** e la **puntualità delle consegne**.

Le variabili del mercato e la necessità di una costante innovazione tecnologica richiedono adattamenti rapidi a esigenze sempre mutevoli.

Il reparto produttivo di Dorigo Utensili ha un'organizzazione unica: grazie alla sofisticata pianificazione e alla rilevazione automatica dell'avanzamento della produzione, si garantisce flessibilità e puntualità delle consegne.

Dorigo Utensili è certificata ISO 9001 / UNI EN ISO 9001:2015, e garantisce un elevato livello qualitativo delle forniture grazie all'uso del controllo di processo, a griglie di gestione concordate con il cliente e alla verifica periodica della taratura degli strumenti di controllo.

Siamo **pronti a fare squadra con voi**.

TECHNOLOGY
PRODUCTS
SALE
SUPPORT

Our strong points are **product quality** and **on-time deliveries**.

The variables of the market and the need for constant technological innovation require to adapt rapidly to steadily changing needs.

The production department of Dorigo Utensili has a unique organization: thanks to the sophisticated scheduling and automatic detection of the production progress, we can guarantee flexibility and on-time deliveries.

Dorigo Utensili is certified ISO 9001 / UNI EN ISO 9001:2015 and guarantees high quality supplies thanks to the use of process control, management charts agreed upon with the customer and periodic verification of the calibration of monitoring instruments.

We are **ready to team up with you**.

DORIGO UTENSILI
DIAMOND & HARD METAL TOOLS

DORIGO UTENSILI s.r.l.
Viale Europa 41 - 31010 FARRA DI SOLIGO (Treviso) - ITALY
Tel. +39 0438 980302-837427 - Fax +39 0438 82349
www.dorigoutensili.it